Sun Fire™ Midrange Systems Platform Administration Manual

Firmware Release 5.19.0

Sun Microsystems, Inc.
www.sun.com

Part No. 819-1271-10
July 2005, Revision A

Submit comments about this document at: http://www.sun.com/hwdocs/feedback

Copyright 2005 Sun Microsystems, Inc., 4150 Network Circle, Santa Clara, California 95054, U.S.A. All rights reserved.

Sun Microsystems, Inc. has intellectual property rights relating to technology that is described in this document. In particular, and without limitation, these intellectual property rights may include one or more of the U.S. patents listed at http://www.sun.com/patents and one or more additional patents or pending patent applications in the U.S. and in other countries.

This document and the product to which it pertains are distributed under licenses restricting their use, copying, distribution, and decompilation. No part of the product or of this document may be reproduced in any form by any means without prior written authorization of Sun and its licensors, if any.

Third-party software, including font technology, is copyrighted and licensed from Sun suppliers.

Parts of the product may be derived from Berkeley BSD systems, licensed from the University of California. UNIX is a registered trademark in the U.S. and in other countries, exclusively licensed through X/Open Company, Ltd.

Sun, Sun Microsystems, the Sun logo, docs.sun.com, Sun Fire, Sun BluePrints, OpenBoot, Sun StorEdge, and Solaris are trademarks or registered trademarks of Sun Microsystems, Inc. in the U.S. and in other countries.

All SPARC trademarks are used under license and are trademarks or registered trademarks of SPARC International, Inc. in the U.S. and in other countries. Products bearing SPARC trademarks are based upon an architecture developed by Sun Microsystems, Inc.

The OPEN LOOK and Sun™ Graphical User Interface was developed by Sun Microsystems, Inc. for its users and licensees. Sun acknowledges the pioneering efforts of Xerox in researching and developing the concept of visual or graphical user interfaces for the computer industry. Sun holds a non-exclusive license from Xerox to the Xerox Graphical User Interface, which license also covers Sun's licensees who implement OPEN LOOK GUIs and otherwise comply with Sun's written license agreements.

U.S. Government Rights—Commercial use. Government users are subject to the Sun Microsystems, Inc. standard license agreement and applicable provisions of the FAR and its supplements.

DOCUMENTATION IS PROVIDED "AS IS" AND ALL EXPRESS OR IMPLIED CONDITIONS, REPRESENTATIONS AND WARRANTIES, INCLUDING ANY IMPLIED WARRANTY OF MERCHANTABILITY, FITNESS FOR A PARTICULAR PURPOSE OR NON-INFRINGEMENT, ARE DISCLAIMED, EXCEPT TO THE EXTENT THAT SUCH DISCLAIMERS ARE HELD TO BE LEGALLY INVALID.

Copyright 2005 Sun Microsystems, Inc., 4150 Network Circle, Santa Clara, California 95054, Etats-Unis. Tous droits réservés.

Sun Microsystems, Inc. a les droits de propriété intellectuels relatants à la technologie qui est décrit dans ce document. En particulier, et sans la limitation, ces droits de propriété intellectuels peuvent inclure un ou plus des brevets américains énumérés à http://www.sun.com/patents et un ou les brevets plus supplémentaires ou les applications de brevet en attente dans les Etats-Unis et dans les autres pays.

Ce produit ou document est protégé par un copyright et distribué avec des licences qui en restreignent l'utilisation, la copie, la distribution, et la décompilation. Aucune partie de ce produit ou document ne peut être reproduite sous aucune forme, parquelque moyen que ce soit, sans l'autorisation préalable et écrite de Sun et de ses bailleurs de licence, s'il y ena.

Le logiciel détenu par des tiers, et qui comprend la technologie relative aux polices de caractères, est protégé par un copyright et licencié par des fournisseurs de Sun.

Des parties de ce produit pourront être dérivées des systèmes Berkeley BSD licenciés par l'Université de Californie. UNIX est une marque déposée aux Etats-Unis et dans d'autres pays et licenciée exclusivement par X/Open Company, Ltd.

Sun, Sun Microsystems, le logo Sun, docs.sun.com, Sun Fire, Sun BluePrints, OpenBoot, Sun StorEdge, et Solaris sont des marques de fabrique ou des marques déposées de Sun Microsystems, Inc. aux Etats-Unis et dans d'autres pays.

Toutes les marques SPARC sont utilisées sous licence et sont des marques de fabrique ou des marques déposées de SPARC International, Inc. aux Etats-Unis et dans d'autres pays. Les produits protant les marques SPARC sont basés sur une architecture développée par Sun Microsystems, Inc.

L'interface d'utilisation graphique OPEN LOOK et Sun™ a été développée par Sun Microsystems, Inc. pour ses utilisateurs et licenciés. Sun reconnaît les efforts de pionniers de Xerox pour la recherche et le développment du concept des interfaces d'utilisation visuelle ou graphique pour l'industrie de l'informatique. Sun détient une license non exclusive do Xerox sur l'interface d'utilisation graphique Xerox, cette licence couvrant également les licenciées de Sun qui mettent en place l'interface d 'utilisation graphique OPEN LOOK et qui en outre se conforment aux licences écrites de Sun.

LA DOCUMENTATION EST FOURNIE "EN L'ÉTAT" ET TOUTES AUTRES CONDITIONS, DECLARATIONS ET GARANTIES EXPRESSES OU TACITES SONT FORMELLEMENT EXCLUES, DANS LA MESURE AUTORISEE PAR LA LOI APPLICABLE, Y COMPRIS NOTAMMENT TOUTE GARANTIE IMPLICITE RELATIVE A LA QUALITE MARCHANDE, A L'APTITUDE A UNE UTILISATION PARTICULIERE OU A L'ABSENCE DE CONTREFAÇON.

Please
Recycle

Adobe PostScript

Contents

Preface xix

1. Introduction 1

Domains 2

System Components 3

Segments 3

System Controller 8

Serial and Ethernet Ports 9

System Controller Connections 10

Logical Connection Limits 10

Secure Remote Connections 10

System Controller Firmware 11

Platform Administration 11

System Controller Tasks Completed at System Power-On 12

Domain Administration 12

Environmental Monitoring 13

Log Messages 14

Setting Up for Redundancy 14

CPU/Memory Boards 15

I/O Assemblies 16

Cooling 17
Power 18
Repeater Boards 19
System Clocks 20
Reliability, Availability, and Serviceability (RAS) 21
Reliability 21
POST 21
Environmental Monitoring 22
System Controller Clock Failover 22
Error Checking and Correction 22
Availability 23
Component Location Status 23
System Controller Failover Recovery 25
Error Diagnosis and Domain Recovery 25
Hung Domain Recovery 26
Unattended Power Failure Recovery 26
System Controller Reboot Recovery 26
Serviceability 27
LEDs 27
Nomenclature 27
System Controller XIR Support 27
System Error Buffer 27
Capacity on Demand Option 28
Dynamic Reconfiguration 28
Sun Management Center Software for Sun Fire Midrange Systems 29
FrameManager 29

2. Accessing the System Controller 31
Establishing Connections to the SC 31

Establishing Serial Connections to the SC 32

- To Initiate a Serial Connection With `tip` 32
- To Initiate a Serial Connection Using the Serial Port 32

Establishing Remote Connections to the SC 32

- To Initiate a Remote Connection With SSH 33
- To Initiate a Remote Connection With TELNET 33
- To Bypass the SC Main Menu When Using TELNET 34

Using the SC Main Menu 34

- To Select Destinations From the SC Main Menu 34

System Controller Navigation 36

Navigation Diagram Notes 37

- To Navigate Between The Platform Shell And a Domain 37
- To Go From a Domain Console To a Domain Shell 38
- To Go From a Domain Shell To a Domain Console 38

Terminating Connections to the SC 39

- To Terminate a Serial Connection With `tip` 39
- To Terminate a Remote Connection 40

3. System Power On and Setup 43

Setting Up the Hardware 45

- To Install and Cable the Hardware 45
- To Set Up Additional Services Before System Power On 46
- To Power On the Hardware 47
- To Power On the Power Grids 47

Setting Up the Platform 47

Setting the Platform Date and Time 48

- To Set the Date, Time, and Time Zone for the Platform 48
- To Set a Password for the Platform 49
- To Configure Platform Parameters 49

Setting Up Domain A 50

- To Access the Domain 50
- To Set the Date and Time for Domain A 50
- To Set a Password for Domain A 51
- To Configure Domain-Specific Parameters 51

Saving the Current Configuration to a Server 53

- To Use `dumpconfig` to Save Platform and Domain Configurations 53

Installing and Booting the Solaris Operating Environment 54

- To Install and Boot the Solaris Operating Environment 54

4. Creating and Starting Multiple Domains 55

Creating and Starting Domains 55

Using UltraSPARC IV+ System Boards in Domains 55

- To Enable UltraSPARC IV+ Domain Support 57
- To Display the Status of UltraSPARC IV+ Domain Support 57
- To Create Multiple Domains 58
- To Create a Second Domain 59
- To Create a Third Domain on a Sun Fire E6900 or 6800 System 61
- To Start a Domain 62

5. General Administration 63

Powering Off and On the System 63

Powering Off the System 64

- To Power Off the System 64
- To Power On the System 65

Setting Keyswitch Positions 67

- To Power On a Domain 67

Shutting Down Domains 68

- To Shut Down a Domain 68

Assigning and Unassigning Boards 68

- To Assign a Board to a Domain 69
- To Unassign a Board From a Domain 72

Setting PCI Mode 73

- To Set a PCI Board to PCI Mode 74
- To Display The Mode Status of a PCI Board 74
- To Set a PCI Board to PCI-X Mode 74

Swapping Domain HostID/MAC Addresses 74

- To Swap the HostID/MAC Address Between Two Domains 75
- To Restore the HostID/MAC Address Swapped Between Domains 77

Upgrading the Firmware 78

Saving and Restoring Configurations 79

Using the `dumpconfig` Command 79

Using the `restoreconfig` Command 80

6. Security Guidelines 81

Securing the System Controller 81

Guidelines for Securing the SC 82

Securing the System Platform 84

Selecting a Remote Connection Type 86

Enabling SSH 86

- To Enable SSH 87

Features Not Supported by SSH 88

Changing SSH Host Keys 89

Configuring the Platform Loghost 89

Using the SNMP Protocol Default Configuration 90

Setting the SNTP Protocol Configuration 90

Defining the Platform Password 91

Defining Hardware Access Control Lists (ACLs) 91

▼ To Define Hardware Access Control Lists 91
Rebooting the SC to Implement Settings 92
Securing the System Domains 93
Defining Passwords for the Domains 94
Defining Domain Loghosts 95
Configuring Domain SNMP Information 96
Configuring the Virtual Keyswitch for Each Domain 97
Additional Security Considerations 97
Special Key Sequences Allow RTOS Shell Access 97
Domain Minimization 98
Solaris Operating Environment Security 98

7. Automatic Diagnosis and Recovery 99
Automatic Diagnosis and Recovery Overview 99
Automatic Recovery of Hung Domains 102
Domain Diagnosis Events 103
Domain Recovery Controls 104
The `syslog` Loghost 104
Domain Parameters 104
Obtaining Auto-Diagnosis and Domain Recovery Information 105
Reviewing Auto-Diagnosis Event Messages 105
Reviewing Component Status 108
Reviewing Additional Error Information 110

8. System Controller Failover 113
SC Failover Overview 113
What Triggers an Automatic Failover 114
What Happens During a Failover 114
SC Failover Prerequisites 116

Conditions That Affect Your SC Failover Configuration 117

Managing SC Failover 117

- To Disable SC Failover 118
- To Enable SC Failover 118
- To Perform a Manual SC Failover 118
- To Obtain Failover Status Information 119

Recovering After an SC Failover 121

- To Recover After an SC Failover Occurs 121

9. Capacity on Demand 123

COD Overview 123

COD Licensing Process 124

COD RTU License Allocation 124

Instant Access CPUs 125

Instant Access CPUs as Hot-Spares 126

Resource Monitoring 126

Getting Started with COD 126

Managing COD RTU Licenses 127

- To Obtain and Add a COD RTU License Key to the COD License Database 128
- To Delete a COD License Key From the COD License Database 129
- To Review COD License Information 129

Activating COD Resources 131

- To Enable or Disable Instant Access CPUs and Reserve Domain RTU Licenses 132

Monitoring COD Resources 133

COD CPU/Memory Boards 133

- To Identify COD CPU/Memory Boards 134

COD Resource Usage 134

- To View COD Usage by Resource 135

▼ To View COD Usage by Domain 136

▼ To View COD Usage by Resource and Domain 137

COD-Disabled CPUs 137

Other COD Information 139

10. Testing System Boards 141

Testing a CPU/Memory Board 141

▼ To Test a CPU/Memory Board 142

Testing an I/O Assembly 142

▼ To Test an I/O Assembly 142

11. Removing and Replacing Boards 147

CPU/Memory Boards and I/O Assemblies 148

▼ To Remove and Replace a System Board 148

▼ To Unassign a Board From a Domain or Disable a System Board 150

▼ To Hot-Swap a CPU/Memory Board Using DR 151

▼ To Hot-Swap an I/O Assembly Using DR 152

CompactPCI and PCI Cards 153

▼ To Remove and Replace a PCI Card 153

▼ To Remove and Replace a CompactPCI Card 154

Repeater Boards 154

▼ To Remove and Replace a Repeater Board 154

System Controller Board 156

▼ To Remove and Replace the System Controller Board in a Single SC Configuration 156

▼ To Remove and Replace a System Controller Board in a Redundant SC Configuration 158

ID Board and Centerplane 159

▼ To Remove and Replace an ID Board and Centerplane 159

12. Troubleshooting 163

Capturing and Collecting System Information 163

Platform, Domain, and System Messages 164

Platform and Domain Status Information From System Controller Commands 166

Diagnostic and System Configuration Information From Solaris Operating Environment Commands 167

Domain Not Responding 168

▼ To Recover From a Hung Domain 168

Board and Component Failures 169

Handling Component Failures 169

▼ To Handle Failed Components 170

Recovering from a Repeater Board Failure 170

A. Mapping Device Path Names 173

Device Mapping 173

CPU/Memory Mapping 173

I/O Assembly Mapping 175

PCI I/O Assembly 176

CompactPCI I/O Assembly 181

▼ To Determine an I/O Physical Slot Number Using an I/O Device Path 181

B. Setting Up an HTTP or FTP Server: Examples 187

Setting Up the Firmware Server 187

▼ To Set Up an HTTP Server 188

▼ To Set Up an FTP Server 190

Glossary 193

Index 197

Figures

FIGURE 1-1 Sun Fire E6900 and 6800 Systems in Single-Partition Mode 5

FIGURE 1-2 Sun Fire E6900 and 6800 Systems in Dual-Partition Mode 6

FIGURE 1-3 Sun Fire E4900/4810/4800 Systems in Single-Partition Mode 6

FIGURE 1-4 Sun Fire E4900/4810/4800 Systems in Dual-Partition Mode 7

FIGURE 1-5 Sun Fire 3800 System in Single-Partition Mode 7

FIGURE 1-6 Sun Fire 3800 System in Dual-Partition Mode 8

FIGURE 2-1 Navigating Among the Platform Shell, the Domain Shell, and Domain Console 36

FIGURE 3-1 Flowchart of Power On and System Setup Steps 44

FIGURE 6-1 System With Domain Separation 83

FIGURE 7-1 Auto Diagnosis and Domain Recovery Process 100

FIGURE A-1 Sun Fire E6900 and 6800 PCI Physical Slot Designations for IB6 Through IB9 179

FIGURE A-2 Sun Fire E4900/4810/4800 Systems PCI Physical Slot Designations for IB6 and IB8 180

FIGURE A-3 Sun Fire 3800 System 6-Slot CompactPCI Physical Slot Designations 183

FIGURE A-4 Sun Fire E4900/4810/4800 Systems 4-Slot CompactPCI Physical Slot Designations 185

FIGURE A-5 Sun Fire E6900 and 6800 Systems 4-Slot CompactPCI Physical Slot Designations for IB6 through IB9 186

Tables

TABLE 1-1 Repeater Boards in Sun Fire Midrange Systems 3

TABLE 1-2 Maximum Number of Partitions and Domains Per System 4

TABLE 1-3 Board Name Descriptions 5

TABLE 1-4 Functions of System Controller Boards 9

TABLE 1-5 Serial Port and Ethernet Port Features on the System Controller Board 10

TABLE 1-6 Maximum Number of CPU/Memory Boards in Sun Fire Midrange Systems 15

TABLE 1-7 Maximum Number of I/O Assemblies and I/O Slots per I/O Assembly 16

TABLE 1-8 Configuring for I/O Redundancy 16

TABLE 1-9 Minimum and Maximum Number of Fan Trays 17

TABLE 1-10 Minimum and Redundant Power Supply Requirements 18

TABLE 1-11 Sun Fire E6900 and 6800 System Components in Each Power Grid 19

TABLE 1-12 Repeater Board Assignments by Domains in the Sun Fire E6900 and 6800 Systems 19

TABLE 1-13 Repeater Board Assignments by Domains in Sun Fire E4900/4810/4800/3800 Systems 20

TABLE 1-14 Sun Fire E6900 and 6800 Domain and Repeater Board Configurations for Single- and Dual-Partitioned Systems 20

TABLE 1-15 Sun Fire E4900/4810/4800/3800 Domain and Repeater Board Configurations for Single- and Dual-Partitioned Systems 20

TABLE 1-16 ECC Error Classes 22

TABLE 1-17 Component Locations 24

TABLE 1-18 Results of `setkeyswitch` Settings During a Power Failure 26

TABLE 3-1 Services to Be Set Up Before System Power On 46

TABLE 3-2 Steps in Setting Up Domains Including the `dumpconfig` Command 52

TABLE 4-1 Sun Fire E6900 or 6800 System Domain System Board Combinations 56

TABLE 4-2 Sun Fire E4900 or 4800 System Domain System Board Combinations 56

TABLE 4-3 Guidelines for Creating Three Domains on Sun Fire E6900 or 6800 System 62

TABLE 5-1 Overview of Steps to Assign a Board to a Domain 69

TABLE 5-2 Overview of Steps to Unassign a Board From a Domain 69

TABLE 6-1 Platform Security Configuration Checklist 85

TABLE 6-2 SSH Server Attributes 86

TABLE 6-3 Domain Security Configuration Checklist 93

TABLE 7-1 Diagnostic and Domain Recovery Parameters in the `setupdomain` Command 105

TABLE 9-1 COD License Information 130

TABLE 9-2 `setupplatform` Command Options for COD Resource Configuration 131

TABLE 9-3 `showcodusage` Resource Information 135

TABLE 9-4 `showcodusage` Domain Information 136

TABLE 9-5 Obtaining COD Configuration and Event Information 139

TABLE 11-1 Repeater Boards and Domains 155

TABLE 12-1 Capturing Error Messages and Other System Information 164

TABLE 12-2 System Controller Commands that Display Platform and Domain Status Information 166

TABLE 12-3 Adjusting Domain Resources When a Repeater Board Fails 171

TABLE A-1 CPU and Memory Agent ID Assignment 174

TABLE A-2 I/O Assembly Type and Number of Slots per I/O Assembly by System Type 175

TABLE A-3 Number and Name of I/O Assemblies per System 175

TABLE A-4 I/O Controller Agent ID Assignments 176

TABLE A-5 8-Slot PCI I/O Assembly Device Map for the Sun Fire Midrange Systems 177

TABLE A-6 Mapping Device Path to I/O Assembly Slot Numbers for Sun Fire 3800 Systems 182

TABLE A-7 Mapping Device Path to I/O Assembly Slot Numbers for Sun Fire E6900/E4900/6800/4810/4800 Systems 183

Code Samples

CODE EXAMPLE 2-1 Selecting Destinations 34

CODE EXAMPLE 2-2 Obtaining a Domain Shell From the Domain Console 38

CODE EXAMPLE 2-3 Ending a `tip` Session 40

CODE EXAMPLE 3-1 `password` Command Example For a Domain With No Password Set 51

CODE EXAMPLE 3-2 Sample Boot Error Message When the `auto-boot?` Parameter Is Set to `true` 54

CODE EXAMPLE 5-1 `showboards -a` Example Before Assigning a Board to a Domain 70

CODE EXAMPLE 7-1 Example of Auto-Diagnosis Event Message Displayed on the Platform Console 101

CODE EXAMPLE 7-2 Example of Domain Message Output for Automatic Domain Recovery After the Domain Heartbeat Stops 102

CODE EXAMPLE 7-3 Example of Domain Console Output for Automatic Domain Recovery After the Domain Does Not Respond to Interrupts 103

CODE EXAMPLE 7-4 Domain Diagnosis Event Message – Non-fatal Domain Hardware Error 103

CODE EXAMPLE 7-5 Example of Domain Console Auto-Diagnostic Message Involving Multiple FRUs 108

CODE EXAMPLE 7-6 Example of Domain Console Auto-Diagnostic Message Involving an Unresolved Diagnosis 108

CODE EXAMPLE 7-7 `showboards` Command Output – `Disabled` and `Degraded` Components 109

CODE EXAMPLE 7-8 `showcomponent` Command Output – Disabled Components 110

CODE EXAMPLE 7-9 `showerrorbuffer` Command Output – Hardware Error 111

CODE EXAMPLE 8-1 Messages Displayed During an Automatic Failover 114

CODE EXAMPLE 8-2 `showfailover` Command Output Example 119

CODE EXAMPLE 8-3 `showfailover` Command Output – Failover Degraded Example 120

CODE EXAMPLE 9-1 Domain Console Log Output Containing Disabled COD CPUs 137

CODE EXAMPLE 9-2 `showcomponent` Command Output – Disabled COD CPUs 138

CODE EXAMPLE 11-1 Confirming Board ID Information 160

CODE EXAMPLE 11-2 ID Information to Enter Manually 161

CODE EXAMPLE B-1 Locating the `Port 80` Value in `httpd.conf` 188

CODE EXAMPLE B-2 Locating the `ServerAdmin` Value in `httpd.conf` 189

CODE EXAMPLE B-3 Locating the `ServerName` Value in `httpd.conf` 189

CODE EXAMPLE B-4 Starting Apache 189

Preface

This book provides an overview of the system and presents a step-by-step description of common administration procedures. It explains how to configure and manage the platform and domains. It also explains how to remove and replace components and perform firmware upgrades. It contains information about security, troubleshooting, and a glossary of technical terms.

How This Book Is Organized

Chapter 1 describes domains and the system controller. It provides an overview of partitions and domains, redundant system components, and minimum system configurations. This chapter also provides an overview of reliability, serviceability, and availability.

Chapter 2 explains how to navigate between the platform and domain shells, between the Solaris™ operating environment and the domain shell, or between the OpenBoot™ PROM and the domain shell. This chapter also explains how to terminate a system controller session.

Chapter 3 explains how to power on and set up the system for the first time.

Chapter 4 explains how to create and start multiple domains.

Chapter 5 provides information on general administrative tasks, such as powering on and powering off the system. It also explains how to update firmware.

Chapter 6 presents information on security.

Chapter 7 describes the automatic diagnosis and domain restoration features of the firmware.

Chapter 8 describes how system controller failover works.

Chapter 9 describes the Capacity on Demand (COD) option and how to allocate, activate, and monitor COD resources.

Chapter 10 describes how to test boards.

Chapter 11 describes the firmware steps necessary to remove and install a CPU/Memory board, I/O assembly, Compact PCI card, PCI card, Repeater board, System Controller board, and ID board/centerplane.

Chapter 12 provides troubleshooting information about system faults and procedures for gathering diagnostic information, recovering from a hung domain, and handling component failures.

Appendix A describes how to map device path names to physical system devices.

Appendix B provides examples of setting up an HTTP and FTP server.

Using UNIX Commands

This book assumes you are experienced with the UNIX® operating environment. If you are not experienced with the UNIX operating environment, see one or more of the following for this information:

- Online documentation for the Solaris operating environment, available at:

  `http://www.sun.com/documentation`

- *Sun Hardware Platform Guide*, which is available in both hard copy and online with your operating system release.

  This document describes the Solaris operating environment information specific to Sun Fire systems.

- *Release Notes Supplement for Sun Hardware*, which describes late-breaking information about the Solaris operating environment.
- Other software documentation that you received with your system.

Typographic Conventions

Typeface*	Meaning	Examples
`AaBbCc123`	The names of commands, files, and directories; on-screen computer output	Edit your `.login` file. Use `ls -a` to list all files. `% You have mail.`
`AaBbCc123`	What you type, when contrasted with on-screen computer output	`%` **`su`** `Password:`
AaBbCc123	Book titles, new words or terms, words to be emphasized. Replace command-line variables with real names or values.	Read Chapter 6 in the *User's Guide*. These are called *class* options. You *must* be superuser to do this. To delete a file, type `rm` *filename*.

* The settings on your browser might differ from these settings.

Shell Prompts

Shell	Prompt
C shell	*machine-name*`%`
C shell superuser	*machine-name*`#`
Bourne shell and Korn shell	`$`
Bourne shell and Korn shell superuser	`#`

Related Documentation

Type of Book	Title	Part Number
Release Notes	*Sun Fire Midrange Systems Firmware 5.19.0 Release Notes*	819-1270
System Controller	*Sun Fire Midrange System Controller Command Reference Manual*	819-1272
Sun Management Center	*Sun Management Center 3.5 Version 3 Supplement for Sun Fire Midrange Systems*	817-3626
Dynamic Reconfiguration	*Sun Fire Midrange Systems Dynamic Reconfiguration User Guide*	817-4585
Overview	*Sun Fire 6800/4810/4800/3800 Systems Overview Manual*	805-7362
	Sun Fire E6900/E4900 Systems Overview Manual	817-4119
Service	*Sun Fire 6800/4810/4800/3800 Systems Hardware Reference Manual*	805-7363
	Sun Fire E6900/E4900 Systems Service Manual	817-4120
	Sun Fire 4810/4800/3800 System Cabinet Mounting Guide	806-6781
Solaris operating environment	*Sun Hardware Platform Guide*	Varies with release
Solaris operating environment	*Release Notes Supplement for Sun Hardware*	Varies with release

Accessing Sun Documentation

You can view, print, or purchase a broad selection of Sun documentation, including localized versions, at:

`http://www.sun.com/documentation`

Contacting Sun Technical Support

If you have technical questions about this product that are not answered in this document, go to:

`http://www.sun.com/service/contacting`

Sun Welcomes Your Comments

Sun is interested in improving its documentation and welcomes your comments and suggestions. You can submit your comments by going to:

`http://www.sun.com/hwdocs/feedback`

Please include the title and part number of your document with your feedback:

Sun Fire Midrange Systems Platform Administration Manual, part number 819-1271-10

CHAPTER 1

Introduction

This chapter introduces the features for the Sun Fire™ family of midrange servers– the E6900/E4900/6800/4810/4800/3800 systems. For detailed descriptions of these systems, refer to the *Sun Fire E6900/E4900 Systems Overview Manual* and the *Sun Fire 6800/4810/4800/3800 Systems Overview Manual*.

This chapter describes:

- "Domains" on page 2
- "System Components" on page 3
- "Segments" on page 3
- "System Controller" on page 8
- "Setting Up for Redundancy" on page 14
- "Reliability, Availability, and Serviceability (RAS)" on page 21
- "Capacity on Demand Option" on page 28
- "Sun Management Center Software for Sun Fire Midrange Systems" on page 29
- "FrameManager" on page 29

The term *platform*, as used in this book, refers to the collection of resources such as power supplies, the centerplane, and fans that are *not* for the exclusive use of a domain.

A *segment*, also referred to as a *partition*, is a group of Sun FirePlane switches (Repeater boards) that are used together to provide communication between CPU/Memory boards and I/O assemblies in the same domain.

A *domain* runs its own instance of the Solaris operating environment and is independent of other domains. Each domain has its own CPUs, memory, and I/O assemblies. Hardware resources including fans and power supplies are shared among domains, as necessary for proper operation.

The *system controller* (SC) is an embedded system that configures and monitors the platform. You access the system controller using either serial or Ethernet connections. It is the focal point for platform and domain configuration and management, and is used to connect to the domain consoles.

The system controller offers a command-line interface that enables you to perform tasks needed to configure the platform and each domain. The system controller provides monitoring and configuration capabilities through the Simple Network Monitoring Protocol (SNMP), used by the Sun Management Center software. For more information on the system controller hardware and firmware, see "System Controller" on page 8 and "System Controller Firmware" on page 11.

Domains

With this family of midrange systems, you can group system boards (CPU/Memory boards and I/O assemblies) into domains. Each domain can host its own instance of the Solaris operating environment and is independent of other domains.

Domains include the following features:

- Each domain is able to run the Solaris operating environment.
- Domains do not interact with each other.
- Each domain has its own peripheral and network connections.
- Each domain is assigned its own unique host ID.

All systems are configured at the factory with one domain.

You create domains by using either the system controller command-line interface or the Sun™ Management Center software. How to create domains using the system controller software is described in "Creating and Starting Domains" on page 55. For instructions on how to create domains using the Sun Management Center, refer to the *Sun Management Center 3.5 Version 3 Supplement for Sun Fire Midrange Systems*.

The largest domain configuration comprises all CPU/Memory boards and I/O assemblies in the system. The smallest domain configuration consists of one CPU/Memory board and one I/O assembly.

An active domain must meet these requirements:

- Minimum of one CPU/Memory board with memory
- Minimum of one I/O assembly with one I/O card installed
- Required number of Repeater boards (not assigned to a domain; see TABLE 1-1)
- Minimum of one system controller

In addition, sufficient power and cooling is required. The power supplies and fan trays are not assigned to a domain.

If you run more than one domain in a partition, then the domains are not completely isolated. A failed Repeater board could affect all domains within the partition. For more information, see "Repeater Boards" on page 19.

Note – If a Repeater board failure affects a domain running host-licensed software, it is possible to continue running that software by swapping the HostID/MAC address of the affected domain with that of an available domain. For details, see "Swapping Domain HostID/MAC Addresses" on page 74.

System Components

The system boards in each system consist of CPU/Memory boards and I/O assemblies. The Sun Fire midrange systems have Repeater boards (TABLE 1-1) that provide communication between CPU/Memory boards and I/O assemblies.

TABLE 1-1 Repeater Boards in Sun Fire Midrange Systems

System	Boards Required per Partition	Total Number of Boards per System
Sun Fire E6900 and 6800 systems	2	4—RP0, RP1, RP2, RP3
Sun Fire E4900 and 4800 systems	1	2—RP0, RP2
Sun Fire 4810 system	1	2—RP0, RP2
Sun Fire 3800 system	N/A	Equivalent of two Repeater boards (RP0 and RP2) are built into an active centerplane.

For a system overview, including descriptions of the boards in the system, refer to the *Sun Fire 6800/4810/4800/3800 Systems Overview Manual* and the *Sun Fire E6900/E4900 Systems Overview Manual*.

Segments

A segment, also referred to as a *partition*, is a group of Repeater boards that are used together to provide communication between CPU/Memory boards and I/O assemblies. Depending on the system configuration, each partition can be used by either one or two domains.

Sun Fire midrange systems can be configured to have one or two partitions. When a system is divided into two partitions, the system controller firmware logically isolates connections of one partition from the other. Partitioning is done at the Repeater board level. A single-mode partition forms one large partition using all of the Repeater boards. In dual-partition mode, two smaller partitions using fewer Repeater boards are created, each using one-half of the total number of Repeater boards in the system. For more information on Repeater boards, see "Repeater Boards" on page 19.

Use the `setupplatform` command to set up partition mode. For system controller command syntax and descriptions, refer to the *Sun Fire Midrange System Controller Command Reference Manual*.

Isolating errors to one partition is one of the main reasons to configure your system into dual-partition mode. With two partitions, if there is a failure in one domain in a partition, the failure will not affect the other domains running in the other partition. The exception to this is if there is a centerplane failure. If you set up two domains, it is strongly suggested that you configure dual-partition mode with the `setupplatform` command. Each partition should contain one domain.

Be aware that if you configure your system into two partitions, half of the theoretical maximum data bandwidth is available to the domains. However, the snooping address bandwidth is preserved.

The interconnect bus implements cache coherency through a technique called *snooping*. With this approach each cache monitors the address of all transactions on the system interconnect, watching for transactions that update addresses it possesses. Since all CPUs need to see the broadcast addresses on the system interconnect, the address and command signals arrive simultaneously. The address and command lines are connected in a point-to-point fashion.

TABLE 1-2 lists the maximum number of partitions and domains each system can have

TABLE 1-2 Maximum Number of Partitions and Domains Per System

	Sun Fire E6900 and 6800 Systems	**Sun Fire E4900/4810/4800/3800 Systems**
Number of Partitions[1]	1 or 2	1 or 2
Number of Active Domains in Dual-Partition Mode	Up to 4 (A, B, C, D)	Up to 2 (A, C)
Number of Active Domains in Single-Partition Mode	Up to 2 (A, B)	Up to 2 (A, B)

[1] **The default is one partition.**

FIGURE 1-1 through FIGURE 1-6 show partitions and domains for Sun Fire midrange systems. The Sun Fire 3800 system has the equivalent of two Repeater boards, RP0 and RP2, as part of the active centerplane. The Repeater boards in the Sun Fire 3800 system are integrated into the centerplane.

All of these systems are very flexible, and you can assign CPU/Memory boards and I/O assemblies to any domain or partition. The configurations shown in the following illustrations are examples only and your configuration may differ.

TABLE 1-3 describes the board names used in FIGURE 1-1 through FIGURE 1-6.

TABLE 1-3 Board Name Descriptions

Board Name	Description
SB0 – SB5	CPU/Memory boards
IB6 – IB9	I/O assemblies
RP0 – RP3	Repeater boards

FIGURE 1-1 shows the single-partition mode for Sun Fire E6900 and 6800 systems. These systems have four Repeater boards that operate in pairs (RP0, RP1) and (RP2, RP3), six CPU/Memory boards (SB0–SB5), and four I/O assemblies (IB6–IB9).

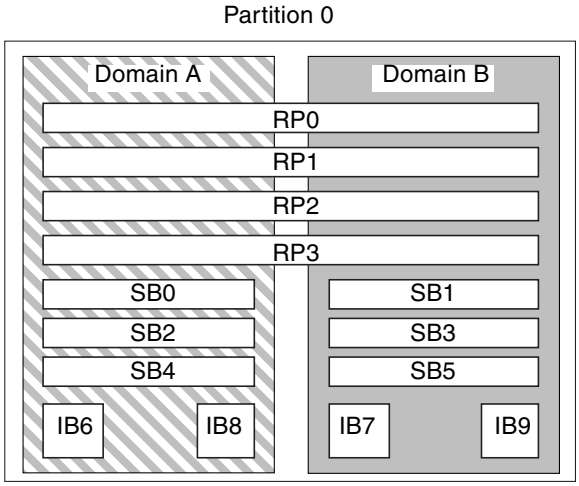

FIGURE 1-1 Sun Fire E6900 and 6800 Systems in Single-Partition Mode

FIGURE 1-2 shows dual-partition mode for Sun Fire E6900 and 6800 systems. The same boards and assemblies are shown as in FIGURE 1-1.

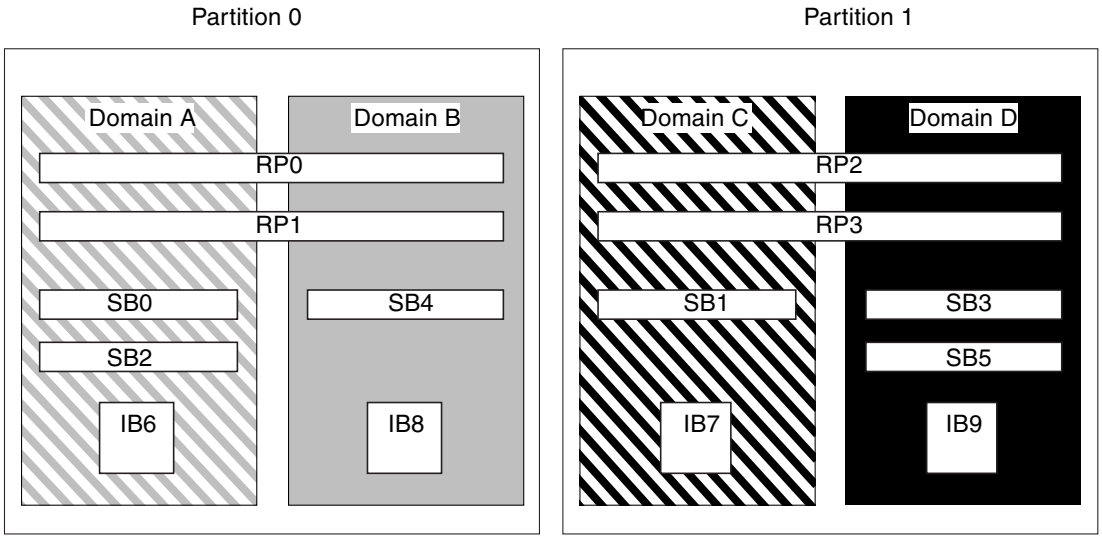

FIGURE 1-2 Sun Fire E6900 and 6800 Systems in Dual-Partition Mode

FIGURE 1-3 shows single-partition mode on Sun Fire E4900/4810/4800 systems. These systems have two Repeater boards (RP0 and RP2) that operate separately (not in pairs as in the Sun Fire E6900 and 6800 systems), three CPU/Memory boards (SB0, SB2, and SB4), and two I/O assemblies (IB6 and IB8).

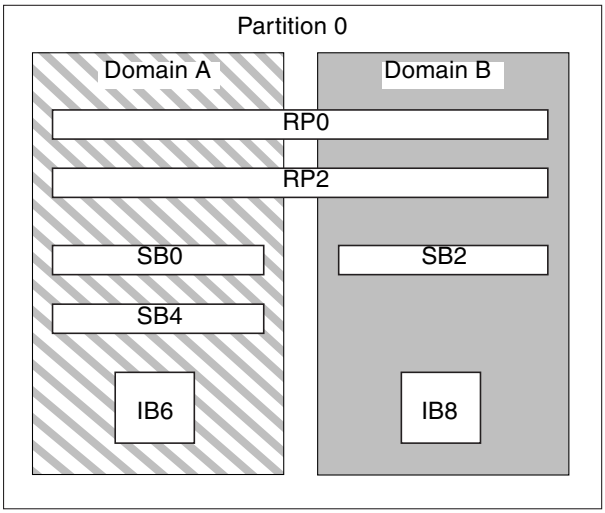

FIGURE 1-3 Sun Fire E4900/4810/4800 Systems in Single-Partition Mode

FIGURE 1-4 shows Sun Fire E4900/4810/4800 systems in dual-partition mode. The same boards and assemblies are shown as in FIGURE 1-3.

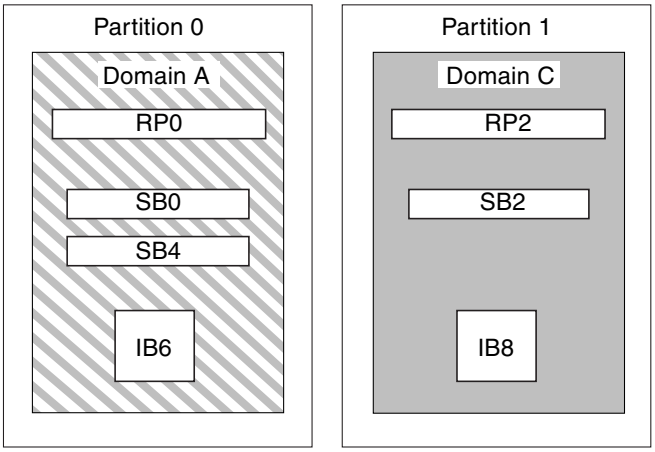

FIGURE 1-4 Sun Fire E4900/4810/4800 Systems in Dual-Partition Mode

FIGURE 1-5 shows the Sun Fire 3800 system in single-partition mode. This system has the equivalent of two Repeater boards (RP0 and RP2) integrated into the active centerplane, two CPU/Memory boards (SB0 and SB2), and two I/O assemblies (IB6 and IB8).

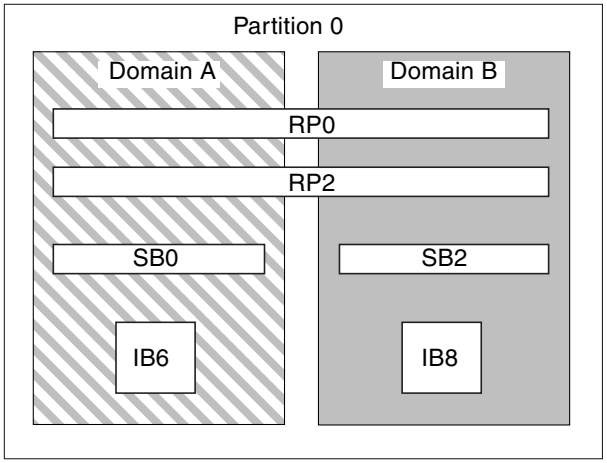

FIGURE 1-5 Sun Fire 3800 System in Single-Partition Mode

FIGURE 1-6 shows the Sun Fire 3800 system in dual-partition mode. The same boards and assemblies are shown as in FIGURE 1-5. This system also has the equivalent of two Repeater boards, RP0 and RP2, integrated into the active centerplane.

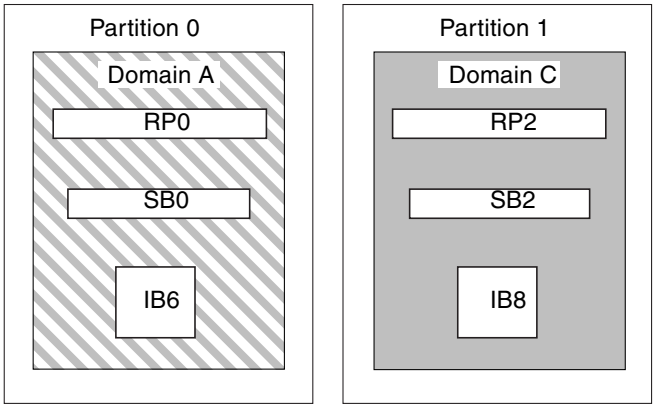

FIGURE 1-6 Sun Fire 3800 System in Dual-Partition Mode

System Controller

The system controller is the focal point for platform and domain configuration and management and is used to connect to the domain consoles.

System controller functions include:

- Managing platform and domain resources
- Monitoring the platform and domains
- Configuring the domains and the platform
- Providing access to the domain consoles
- Providing the date and time to the Solaris operating environment
- Providing the reference clock signal used throughout the system
- Providing console security
- Performing domain initialization
- Providing a mechanism for upgrading firmware on the boards installed in the system
- Providing an interface to Sun Management Center using SNMP

The system can support up to two System Controller boards (TABLE 1-4) that function as a main and spare system controller (SC). This redundant configuration of system controllers supports the SC failover mechanism, which triggers the automatic switchover of the main SC to the spare, if the main SC fails. For details on SC failover, see Chapter 8.

TABLE 1-4 Functions of System Controller Boards

System Controller	Function
Main	Manages all system resources. Configure your system to connect to the main System Controller board.
Spare	If the main SC fails and a failover occurs, the spare SC assumes all system controller tasks formerly handled by the main SC. The spare SC functions as a hot standby (a running SC that can take over as the main SC if the main SC fails), and is used only as a backup for the main SC.

Starting with the 5.16.0 release, the firmware supports an enhanced memory SC (referred to as system controller V2 or SC V2). In a redundant SC configuration, both the main and spare SC must be of the same type. Mixed SC configurations are not supported.

Serial and Ethernet Ports

There are three methods to connect to the system controller console:

- Serial connection – Use the serial port to connect directly to an ASCII terminal or to a network terminal server (NTS).
- SSH connection– Use the Ethernet port to connect to the network, using `the SSH` protocol.
- TELNET connection– Use the Ethernet port to connect to the network, using `the` TELNET protocol.

For security and performance reasons, it is suggested that the system controllers be configured on a private network. For details, refer to the Sun BluePrints™ online article, *Sun Fire Midframe Server Best Practices for Administration*, at

`http://www.sun.com/blueprints`

TABLE 1-5 describes the features of the serial port and the Ethernet port on the System Controller board. The Ethernet port provides the fastest connection.

TABLE 1-5 Serial Port and Ethernet Port Features on the System Controller Board

Capability	Serial Port	Ethernet Port
Number of connections	One	Multiple (`SSH`: five; `telnet`: twelve)
Connection speed	9.6 Kbps	10/100 Mbps
System logs	Remain in the system controller message queue	Remain in the system controller message queue and are written to the configured `syslog` host(s). See TABLE 3-1 for instructions on setting up the platform and domain loghosts. Loghosts capture error messages regarding system failures and can be used to troubleshoot system failures.
SNMP	Not supported	Supported for Sun Management Center only
Firmware upgrades	No	Yes (using the `flashupdate` command)
Security	• Secure physical location plus secure terminal server • Password protection to the platform and domain shells	Password-protected access only

System Controller Connections

Logical Connection Limits

The system controller supports one logical connection on the serial port and multiple logical connections with a remote connection using `SSH` (as many as five connections) or `telnet` (as many as twelve connections) on the Ethernet port. Connections can be set up for either the platform or one of the domains. Each domain can have *only one* logical connection at a time.

Secure Remote Connections

An alternative to the Telnet protocol, the Secure Shell (SSH) protocol provides secure access to the system controller. SSH uses encryption to protect the data flowing between host and client, using authentication mechanisms to identify both hosts and clients.

The system controller provides SSHv2 server capability. You can use the SSH client software included in the Solaris 9 operating environment or OpenSSH clients with the Solaris 8 operating environment or SSHv2-compliant clients from other operating environments. For additional information on SSH, see "Securing the System Platform" on page 84.

System Controller Firmware

The sections that follow provide information on the system controller firmware, including:

- Platform Administration
- System Controller Tasks Completed at System Power-On
- Domain Administration
- Environmental Monitoring
- Log Messages

Platform Administration

The platform administration function manages resources and services that are shared among the domains. With this function, you can determine how resources and services are configured and shared.

Platform administration functions include:

- Monitoring and controlling power to the components
- Logically grouping hardware to create domains
- Configuring the system controller's network, loghost, and SNMP settings
- Determining which domains can be used
- Determining how many domains can be used (Sun Fire E6900 and 6800 systems only)
- Configuring access control for CPU/Memory boards and I/O assemblies

Platform Shell

The platform shell is the operating environment for the platform administrator. Only commands that pertain to platform administration are available. To connect to the platform, see "To Select Destinations From the SC Main Menu" on page 34.

Platform Console

The platform console is the system controller serial port, where the system controller boot messages and platform log messages are printed.

Note – The Solaris operating environment messages are displayed on the domain console.

System Controller Tasks Completed at System Power-On

When you power on the system, the system controller boots the real-time operating system and starts the System Controller Application (ScApp).

If there was an interruption of power, additional tasks completed at system power-on include:

- If a domain is active, the system controller turns on components needed to support the active domain (power supplies, fan trays, and Repeater boards) as well as the boards in the domain (CPU/Memory boards and I/O assemblies).
- If no domains are active, only the system controller is powered on.
- The system controller reboots any domains that were active when the system lost power.

Domain Administration

The domain administration function manages resources and services for a specific domain.

Domain administration functions include:

- Configuring the domain settings
- Controlling the virtual keyswitch
- Recovering errors

For platform administration functions, see "Platform Administration" on page 11.

Domain Shell

The domain shell is the operating environment for the domain administrator and is where domain tasks can be performed. There are four domain shells (A–D).

To connect to a domain, see "To Navigate Between The Platform Shell And a Domain" on page 37.

Domain Console

If the domain is active (Solaris operating environment, the OpenBoot PROM, or the power-on self-test (POST) *is* running in the domain), you can access the domain console. When you connect to the domain console, you will be at one of the following modes of operation:

- Solaris operating environment console
- OpenBoot PROM
- Domain will be running POST and you can view the POST output.

If the domain is not active, you will be at the domain console prompt, where the prompt is *schostname*:*domainID*>:

Maximum Number of Domains

The domains that are available vary with the system type and configuration. For more information on the maximum number of domains you can have, see "Segments" on page 3.

Domain Keyswitch

Each domain has a virtual keyswitch. You can set five keyswitch positions: off (default), standby, on, diag, and secure.

For information on keyswitch settings, see "Setting Keyswitch Positions" on page 67. For a description and syntax of the `setkeyswitch` command, refer to the *Sun Fire Midrange System Controller Command Reference Manual*.

Environmental Monitoring

Sensors throughout the system monitor temperature, voltage, current, and fan speed. The system controller periodically reads the values from each of these sensors. This information is maintained for display using the console commands and is available to Sun Management Center through SNMP.

When a sensor is generating values that are outside of the normal limits, the system controller takes appropriate action. This includes shutting down components in the system to prevent damage. Domains may be automatically paused as a result. If domains are paused, an abrupt hardware pause occurs (it is not a graceful shutdown of the Solaris operating environment).

Log Messages

Console messages generated by the SC for the platform and each domain are displayed on the appropriate consoles. These messages are also logged in a dynamic buffer on the SC, and these logs can be viewed by using the `showlogs` command. Limited history is maintained and log messages are not permanently stored in this 4 Kbyte dynamic buffer. Note that these log messages are lost when the SC is rebooted or when it loses power.

However, if your midrange system has SC V2s (enhanced-memory SCs), approximately 112 Kbytes of certain message logs and system messages are retained in persistent storage, even after the SC is rebooted or the SC loses power. (For details on system error messages, see "System Error Buffer" on page 27.).

The persistent logs can be viewed by using the `showlogs -p` command. For details on the `showlogs` command and the options available to display specific types of persistent log messages, refer to the *Sun Fire Midrange System Controller Command Reference Manual*.

Even if your system has SC V2s, it is strongly suggested that you set up a `syslog` host so that the platform and domain console messages are sent to the `syslog` host, to enhance accountability and long-term storage of log information. Note that the messages retained are *not* the Solaris operating environment console messages.

Setting Up for Redundancy

To minimize single points of failure, configure system resources using redundant components. This allows domains to remain functional. System availability can be enhanced when using redundant components.

For troubleshooting tips to perform if a board or component fails, see "Board and Component Failures" on page 169.

This section covers these topics:

- CPU/Memory Boards
- I/O Assemblies
- Cooling
- Power
- Repeater Boards
- System Clocks

CPU/Memory Boards

All systems support multiple CPU/Memory boards. Each domain *must* contain at least one CPU/Memory board.

The maximum number of CPUs you can have on a CPU/Memory board is four. CPU/Memory boards are configured with either two CPUs or four CPUs. TABLE 1-6 lists the maximum number of CPU/Memory boards for each system.

TABLE 1-6 Maximum Number of CPU/Memory Boards in Sun Fire Midrange Systems

System	Maximum Number of CPU/Memory Boards	Maximum Number of CPUs
Sun Fire E6900 and 6800 systems	6	24
Sun Fire 4810 system	3	12
Sun Fire E4900 and 4800 systems	3	12
Sun Fire 3800 system	2	8

Each CPU/Memory board has eight physical banks of memory. The CPU provides memory management unit (MMU) support for two banks of memory. Each bank of memory has four slots. Dual inline memory modules (DIMMs) must populate a bank in groups of four. The minimum amount of memory needed to operate a domain is one bank (four DIMMs).

A CPU can be used with no memory installed in any of its banks. A memory bank cannot be used unless the corresponding CPU is installed and functioning.

A failed CPU or faulty memory will be isolated from the domain by the CPU power-on self-test (POST). If a CPU is disabled by POST, the corresponding memory banks for the CPU will also be disabled.

You can operate a domain with as little as one CPU and one memory bank (four memory modules).

I/O Assemblies

All systems support multiple I/O assemblies. For the types of I/O assemblies supported by each system and other technical information, refer to the *Sun Fire 6800/4810/4800/3800 Systems Overview Manual* and the *Sun Fire E6900/E4900 Systems Overview Manual*. TABLE 1-7 lists the maximum number of I/O assemblies for each system.

TABLE 1-7 Maximum Number of I/O Assemblies and I/O Slots per I/O Assembly

System	Maximum Number of I/O Assemblies	Number of CompactPCI or PCI I/O Slots per Assembly
Sun Fire E6900 and 6800 systems	4	• 8 slots—6 slots for full-length PCI cards and 2 short slots for short PCI cards • 4 slots for CompactPCI cards
Sun Fire 4810 system	2	• 8 slots—6 slots for full-length PCI cards and 2 short slots for short PCI cards • 4 slots for CompactPCI cards
Sun Fire E4900 and 4800 systems	2	• 8 slots—6 slots for full-length PCI cards and 2 short slots for short PCI cards • 4 slots for CompactPCI cards
Sun Fire 3800 system	2	6 slots for CompactPCI cards

There are two possible ways to configure redundant I/O (TABLE 1-8).

TABLE 1-8 Configuring for I/O Redundancy

Ways to Configure For I/O Redundancy	Description
Redundancy across I/O assemblies	You must have two I/O assemblies in a domain with duplicate cards in each I/O assembly that are connected to the same disk or network subsystem for path redundancy.
Redundancy within I/O assemblies	You must have duplicate cards in the I/O assembly that are connected to the same disk or network subsystem for path redundancy. This does not protect against the failure of the I/O assembly itself.

The network redundancy features use part of the Solaris operating environment, known as IP multipathing. For information on IP multipathing (IPMP), refer to the Solaris documentation supplied with the Solaris 8 or 9 operating environment release.

The Sun StorEdge™ Traffic Manager provides multipath disk configuration management, failover support, I/O load balancing, and single instance multipath support. For details, refer to the Sun StorEdge documentation available on the Sun Storage Area Network (SAN) Web site at:

`http://www.sun.com/storage/san`

Cooling

All systems have redundant cooling when the maximum number of fan trays are installed. If one fan tray fails, the remaining fan trays automatically increase speed, thereby enabling the system to continue to operate.

Caution – With the minimum number of fan trays installed, you *do not* have redundant cooling.

With redundant cooling, you do not need to suspend system operation to replace a failed fan tray. You can hot-swap a fan tray while the system is running, with no interruption to the system.

TABLE 1-9 shows the minimum and maximum number of fan trays required to cool each system For location information, such as the fan tray number, refer to the labels on the system and the following documents:

- *Sun Fire 6800/4810/4800/3800 Systems Service Manual*
- *Sun Fire E6900/E4900 Systems Service Manual*

TABLE 1-9 Minimum and Maximum Number of Fan Trays

System	Minimum Number of Fan Trays	Maximum Number of Fan Trays
Sun Fire E6900 and 6800 systems	3	4
Sun Fire 4810 system	2	3
Sun Fire E4900 and 4800 systems	2	3
Sun Fire 3800 system	3	4

Each system has comprehensive temperature monitoring to ensure that there is no over-temperature stressing of components in the event of a cooling failure or high ambient temperature. If there is a cooling failure, the speed of the remaining operational fans increases. If necessary, the system will be shut down.

Power

In order for power supplies to be redundant, you must have the required number of power supplies installed plus one additional redundant power supply for each power grid (referred to as the n+1 redundancy model). This means that two power supplies are required for the system to function properly. The third power supply is redundant. All three power supplies draw approximately the same current.

The power is shared in the power grid. If one power supply in the power grid fails, the remaining power supplies in the same power grid are capable of delivering the maximum power required for the power grid.

If more than one power supply in a power grid fails, there will be insufficient power to support a full load. For guidelines on what to do when a power supply fails, see "To Handle Failed Components" on page 170.

The System Controller boards and the ID board obtain power from any power supply in the system. Fan trays obtain power from either power grid.

TABLE 1-10 describes the minimum and redundant power supply requirements.

TABLE 1-10 Minimum and Redundant Power Supply Requirements

System	Number of Power Grids per System	Minimum Number of Power Supplies in Each Power Grid	Total Number of Supplies in Each Power Grid (Including Redundant Power Supplies)
Sun Fire E6900 and 6800 systems	2	2 (grid 0)	3
Sun Fire E6900 and 6800 systems		2 (grid 1)	3
Sun Fire 4810 system	1	2 (grid 0)	3
Sun Fire E4900 and 4800 systems	1	2 (grid 0)	3
Sun Fire 3800 system	1	2 (grid 0)	3

In Sun Fire E6900 and 6800 systems, the power grid has power supplies assigned to the power grid. Power supplies ps0, ps1, and ps2 are assigned to power grid 0. Power supplies ps3, ps4, and ps5 are assigned to power grid 1. If one power grid fails, the remaining power grid is still operational.

TABLE 1-11 lists the components in each power grid for Sun Fire E6900 and 6800 systems. If you have a Sun Fire E4900/4810/4800/3800 system, refer to the components in grid 0, since these systems have only power grid 0.

TABLE 1-11 Sun Fire E6900 and 6800 System Components in Each Power Grid

Components in the System	Grid 0	Grid 1
CPU/Memory boards	SB0, SB2, SB4	SB1, SB3, SB5
I/O assemblies	IB6, IB8	IB7, IB9
Power supplies	PS0, PS1, PS2	PS3, PS4, PS5
Repeater boards	RP0, RP1	RP2, RP3
Redundant transfer unit (RTU)	RTUF (front)	RTUR (rear)

Repeater Boards

The Repeater board, also referred to as a Fireplane switch, is a crossbar switch that connects multiple CPU/Memory boards and I/O assemblies. Having the required number of Repeater boards is mandatory for operation. There are Repeater boards in each midrange system except for the Sun Fire 3800. In the Sun Fire 3800 system, the equivalent of two Repeater boards are integrated into the active centerplane. Repeater boards are not fully redundant.

For steps to perform if a Repeater board fails, see "Recovering from a Repeater Board Failure" on page 170.

TABLE 1-12 lists the Repeater board assignments by each domain in Sun Fire E6900 and 6800 systems.

TABLE 1-12 Repeater Board Assignments by Domains in the Sun Fire E6900 and 6800 Systems

Partition Mode	Repeater Boards	Domains
Single partition	RP0, RP1, RP2, RP3	A, B
Dual partition	RP0, RP1	A, B
Dual partition	RP2, RP3	C, D

Note – If an E6900 or 6800 system in single-partition mode has less than four working repeater boards available, the firmware will automatically change to dual-partition mode at the next domain reboot or keyswitch operation.

TABLE 1-13 lists the Repeater board assignments by each domain in Sun Fire E4900/4810/4800/3800 systems.

TABLE 1-13 Repeater Board Assignments by Domains in Sun Fire E4900/4810/4800/3800 Systems

Partition Mode	Repeater Boards	Domains
Single partition	RP0, RP2	A, B
Dual partition	RP0	A
Dual partition	RP2	C

TABLE 1-14 lists the Repeater board and domain configurations for single-partition mode and dual-partition mode in Sun Fire E6900 and 6800 systems.

TABLE 1-14 Sun Fire E6900 and 6800 Domain and Repeater Board Configurations for Single- and Dual-Partitioned Systems

Sun Fire 6800 System in Single-Partition Mode				Sun Fire 6800 System in Dual-Partition Mode			
RP0	RP1	RP2	RP3	RP0	RP1	RP2	RP3
Domain A				Domain A		Domain C	
Domain B				Domain B		Domain D	

TABLE 1-15 lists the configurations for single-partition mode and dual-partition mode in Sun Fire E4900/4810/4800/3800 systems.

TABLE 1-15 Sun Fire E4900/4810/4800/3800 Domain and Repeater Board Configurations for Single- and Dual-Partitioned Systems

Sun Fire 4810/4800/3800 System in Single-Partition Mode		Sun Fire 4810/4800/3800 System in Dual-Partition Mode	
RP0	RP2	RP0	RP2
Domain A		Domain A	Domain C
Domain B			

System Clocks

The System Controller board provides redundant system clocks. For more information on system clocks, see "System Controller Clock Failover" on page 22.

Reliability, Availability, and Serviceability (RAS)

Reliability, availability, and serviceability (RAS) are features of the Sun Fire midrange systems.

- *Reliability* is the probability that a system will stay operational for a specified time period when operating under normal conditions. Reliability differs from availability in that reliability involves only system failure, whereas availability depends on both failure and recovery.
- *Availability*, also known as average availability, is the percentage of time that a system is available to perform its functions correctly. Availability can be measured at the system level or in the context of the availability of a service to an end client. The "system availability" is likely to impose an upper limit on the availability of any products built on top of that system.
- *Serviceability* measures the ease and effectiveness of maintenance and system repair for the product. There is no single well-defined metric, because serviceability can include both mean time to repair (MTTR) and diagnosability.

The following sections provide details on RAS. For more hardware-related information on RAS, refer to the *Sun Fire 6800/4810/4800/3800 Systems Service Manual* and the *Sun Fire E6900/E4900 Systems Service Manual*. For RAS features that involve the Solaris operating environment, refer to the *Sun Hardware Platform Guide*.

Reliability

The firmware reliability features include:

- POST
- Environmental Monitoring
- System Controller Clock Failover
- Error Checking and Correction

The reliability features also improve system availability.

POST

The power-on self-test (POST) is part of powering on a domain. A board or component that fails POST will be disabled. The domain, running the Solaris operating environment, is booted only with components that have passed POST testing.

Environmental Monitoring

The system controller monitors the system temperature, current, and voltage sensors. The fans are also monitored to make sure they are functioning. Environmental status is not provided to the Solaris operating environment—only the need for an emergency shutdown. The environmental status is provided to the Sun Management Center software with SNMP.

System Controller Clock Failover

Each system controller provides a system clock signal to each board in the system. Each board automatically determines which clock source to use. Clock failover is the ability to change the clock source from one system controller to another system controller without affecting the active domains.

When a system controller is reset or rebooted, clock failover is temporarily disabled. When the clock source is available again, clock failover is automatically enabled.

Error Checking and Correction

Any non-persistent storage device, for example dynamic random access memory (DRAM) used for main memory or static random access memory (SRAM) used for caches, is subject to occasional incidences of data loss due to collisions of alpha particles. The data loss changes the value stored in the memory location affected by the collision. These collisions predominantly result in losing one data bit.

When a bit of data is lost, this is referred to as a *soft error* in contrast to a hard error, which results from faulty hardware. The soft errors happen at the *soft error rate*, which can be predicted as a function of:

- Memory density
- Memory technology
- Geographic location of the memory device

When an error-check mechanism detects that one or more bits in a word of data has changed, this is broadly categorized as an error checking and correction (ECC) error. ECC errors can be divided into two classes (TABLE 1-16).

TABLE 1-16 ECC Error Classes

ECC Error Classes	Definition
Correctable errors	ECC errors with one data bit lost, which ECC can correct.
Non-correctable errors	ECC errors with multiple data bits lost.

ECC was developed to facilitate the survival of the naturally occurring data losses. Every word of data stored in memory also has check information stored along with it. This check information facilitates two things:

1. When a word of data is read out of memory, the check information can be used to detect:
   - Whether any of the bits of the word have changed
   - Whether one bit or more than one bit has changed
2. If one bit has changed, the check information can be used to determine which bit in the word changed. The word is corrected by flipping the bit back to its complementary value.

Availability

The firmware availability features include:

- Component Location Status
- Error Diagnosis and Domain Recovery
- Hung Domain Recovery
- Unattended Power Failure Recovery
- System Controller Reboot Recovery

Component Location Status

The physical location of a component, such as slots for CPU/Memory boards or slots for I/O assemblies, can be used to manage hardware resources that are configured into or out of the system.

A component location has either a disabled or enabled state, which is referred to as the *component location status*.

- When you enable a component location, components residing in that location are considered for configuration into the system, subject to the health of the component.
- When you disable a component location, components residing in that location are deconfigured from the system.

For example, if you have components that are failing, you can assign the disabled status to the locations of the failed components so that those components are deconfigured from the system.

The component locations that can be specified are described in TABLE 1-17:

TABLE 1-17 Component Locations

System Component	Component Subsystem	Component Location
CPU system		*slot/port/physical_bank/logical_bank*
	CPU/Memory boards (*slot*)	SB0, SB1, SB2, SB3, SB4, SB5
	Ports on the CPU/Memory board	P0, P1, P2, P3
	Physical memory banks on CPU/Memory boards	B0, B1
	Logical banks on CPU/Memory boards	L0, L1, L2, L3
I/O assembly system		*slot/port/bus* or *slot/card*
	I/O assemblies (*slot*)	IB6, IB7, IB8, IB9
	Ports on the I/O assembly	P0 and P1 Note: Leave at least one I/O controller 0 enabled in a domain so that the domain can communicate with the system controller.
	Buses on the I/O assembly	B0, B1
	I/O cards in the I/O assemblies	C0, C1, C2, C3, C4, C5, C6, C7 (The number of I/O cards in the I/O assembly varies with the I/O assembly type.)

Use the following commands to set and review the component location status:

- `setls`

  You set the component location status by running the `setls` command from the platform or domain shell. The component location status is updated at the next domain reboot, board power cycle, or POST execution (for example, POST is run whenever you perform a `setkeyswitch on` or `off` operation).

  The platform component location status supersedes the domain component location status. For example, if a component location is disabled in the platform, that location will be disabled in all domains. If you change the status of a

component location in a domain, the change applies only to that domain. This means that if the component is moved to another location or to another domain, the component does not retain the same location status.

Note – Starting with the 5.15.0 release, the `enablecomponent` and `disablecomponent` commands have been replaced by the `setls` command. These commands were formerly used to manage component resources. While the `enablecomponent` and `disablecomponent` commands are still available, it is suggested that you use the `setls` command to control the configuration of components into or out of the system.

- `showcomponent`

  Use the `showcomponent` command to display the location status of a component (enabled or disabled). In some cases, certain components identified as disabled cannot be enabled. If the POST status in the `showcomponent` output for a disabled component is `chs` (abbreviation for component health status), the component cannot be enabled, based on the current diagnostic data maintained for the component. For additional information on component health status, see "Automatic Diagnosis and Recovery Overview" on page 99.

System Controller Failover Recovery

Systems with redundant System Controller boards support the SC failover capability. In a high-availability system controller configuration, the SC failover mechanism triggers the switchover of the main SC to the spare if the main SC fails. Within approximately five minutes or less, the spare SC becomes the main and takes over all system controller operations. For details on SC failover, see "SC Failover Overview" on page 113.

Error Diagnosis and Domain Recovery

When the SC detects a domain hardware error, it pauses the domain. The firmware includes an *auto-diagnosis* (AD) engine that tries to identify either the single or multiple components responsible for the error. If possible, the SC disables (deconfigures) those components so that they cannot be used by the system.

After the auto-diagnosis, the SC automatically reboots the domain, provided that the `reboot-on-error` parameter of the `setupdomain` command parameter is set to `true`, as part of the auto-restoration process. For details on the AD engine and the auto-restoration process, see "Automatic Diagnosis and Recovery Overview" on page 99.

An automatic reboot of a specific domain can occur up to a maximum of three times. After the third automatic reboot, the domain is paused if another hardware error occurs, and the error reboots are stopped. Rather than restarting the domain manually, contact your service provider for assistance on resolving the domain hardware error.

If you set the `reboot-on-error` parameter to `false`, the domain is paused when the SC detects a domain hardware error. You must manually restart the domain (perform `setkeyswitch off` and then `setkeyswitch on`).

Hung Domain Recovery

The `hang-policy` parameter of the `setupdomain` command, when set to the value `reset` (default), causes the system controller to automatically recover hung domains. For details, see "Automatic Recovery of Hung Domains" on page 102.

Unattended Power Failure Recovery

If there is a power outage, the system controller reconfigures active domains. TABLE 1-18 describes domain actions that occur during or after a power failure when the keyswitch is:

- Active (set to on, secure, diag)
- Inactive (set to off or standby)
- Processing a keyswitch operation

TABLE 1-18 Results of `setkeyswitch` Settings During a Power Failure

If During a Power Failure the Keyswitch Is	This Action Occurs
on, secure, diag	The domain will be powered on after a power failure.
off, standby	The domain will not be restored after a power failure.
Processing a keyswitch operation, such as off to on, standby to on, or on to off	The domain will not be restored after a power failure.

System Controller Reboot Recovery

The SC can be rebooted through SC failover or by using the `reboot` command. The SC will start up and resume management of the system. The reboot does not disturb the domain(s) currently running the Solaris operating environment.

Serviceability

The firmware serviceability features promote the efficiency and timeliness of providing routine as well as emergency service to midrange systems.

LEDs

All field-replaceable units (FRUs) that are accessible from outside the system have LEDs that indicate their state. The system controller manages all the LEDs in the system, with the exception of the power supply LEDs, which are managed by the power supplies. For a discussion of LED functions, refer to the appropriate board or device chapter of the *Sun Fire 6800/4810/4800/3800 Systems Service Manual* or the *Sun Fire E6900/E4900 Systems Service Manual*.

Nomenclature

The system controller, the Solaris operating environment, the power-on self-test (POST), and the OpenBoot PROM error messages use FRU name identifiers that match the physical labels in the system. The only exception is the OpenBoot PROM nomenclature used for I/O devices, which use the device path names as described in Appendix A.

System Controller XIR Support

The system controller `reset` command enables you to recover from a hard hung domain and extract a Solaris operating environment `core` file.

System Error Buffer

If a system error occurs due to a fault condition, the information is stored in a system error buffer that retains system error messages. This information, which can be viewed by running the `showerrorbuffer` command, is used by your service provider to analyze a failure or problem. For details on the `showerrorbuffer` command, refer to the *Sun Fire Midrange System Controller Command Reference Manual*.

Capacity on Demand Option

Capacity on Demand (COD) is an option that provides additional processing resources (additional CPUs) when you need them. These additional CPUs are provided on COD CPU/Memory boards that are installed in your system. However, to access these COD CPUs, you must first purchase the COD right-to-use (RTU) licenses for them. After you obtain the COD RTU licenses for your COD CPUs, you can activate those CPUs as needed. For details on COD, see "COD Overview" on page 123.

Dynamic Reconfiguration

Dynamic reconfiguration (DR), which is provided as part of the Solaris operating environment, enables you to safely add and remove CPU/Memory boards and I/O assemblies while the system is still running. DR controls the software aspects of dynamically changing the hardware used by a domain, with minimal disruption to user processes running in the domain.

You can use DR to do the following:

- Shorten the interruption of system applications while installing or removing a board
- Disable a failing device by removing it from the logical configuration, before the failure can crash the operating system
- Display the operational status of boards in a system
- Initiate self-tests of a system board while the domain continues to run
- Reconfigure a system while the system continues to run
- Invoke hardware-specific functions of a board or a related attachment

The DR software uses the `cfgadm` command, which is a command-line interface for configuration administration. You can perform domain management DR tasks using the SC. The DR agent also provides a remote interface to the Sun Management Center software on Sun Fire midrange systems.

For complete information on DR, refer to the *Sun Fire Midrange Systems Dynamic Reconfiguration User Guide* and also the Solaris documentation included with the Solaris operating environment.

Sun Management Center Software for Sun Fire Midrange Systems

The Sun Management Center software is the graphical user interface for managing the Sun Fire midrange systems.

To optimize the effectiveness of the Sun Management Center software, you must install it on a separate system. The Sun Management Center software has the capability to logically group domains and the system controller into a single manageable object, to simplify operations.

The Sun Management Center software once configured, is also the recipient of SNMP traps and events.

To use the Sun Management Center, you must attach the System Controller board to a network. With a network connection, you can view both the command-line interface and the graphical user interface.

For information on the Sun Management Center software, refer to the *Sun Management Center 3.5 Version 3 Supplement for Sun Fire Midrange Systems*, which is available online.

FrameManager

The FrameManager is an LCD that is located in the top right corner of the Sun Fire system cabinet. For a description of its functions, refer to the "FrameManager" chapter of the *Sun Fire 6800/4810/4800/3800 Systems Service Manual* and the *Sun Fire E6900/E4900 Systems Service Manual*.

CHAPTER 2

Accessing the System Controller

This chapter explains step-by-step procedures with illustrations describing how to:

- Connect to the platform and the domains
- Navigate among the platform shell, domain shell, and the domain console
- Terminate a connection to the system controller

Topics covered in this chapter include:

- "Establishing Connections to the SC" on page 31
  - "Establishing Serial Connections to the SC" on page 32
  - "Establishing Remote Connections to the SC" on page 32
- "Using the SC Main Menu" on page 34
  - "To Select Destinations From the SC Main Menu" on page 34
- "System Controller Navigation" on page 36
  - "To Navigate Between The Platform Shell And a Domain" on page 37
  - "To Go From a Domain Console To a Domain Shell" on page 38
  - "To Go From a Domain Shell To a Domain Console" on page 38
- "Terminating Connections to the SC" on page 39
  - "To Terminate a Serial Connection With `tip`" on page 39
  - "To Terminate a Remote Connection" on page 40

Establishing Connections to the SC

By default, serial connections to the SC are enabled and remote connections are disabled. To enable remote connections, use the `setupplatform` command. For details on the `setupplatform` command, refer to the command description in the *Sun Fire Midrange System Controller Command Reference Manual*.

This section describes how to use the following types of connections to access the SC main menu:

- Serial Connections
  - TIP connections
  - Serial terminal connections
- Remote Connections
  - SSH
  - TELNET

Establishing Serial Connections to the SC

▼ To Initiate a Serial Connection With `tip`

- **At the machine prompt, type `tip` and the serial port to be used for the system controller session.**

  For example:

```
machinename% tip port_name
connected
```

  The SC main menu is displayed (see CODE EXAMPLE 2-1).

▼ To Initiate a Serial Connection Using the Serial Port

- **Connect the system controller serial port to an ASCII terminal.**

  The SC main menu is displayed (see CODE EXAMPLE 2-1).

Establishing Remote Connections to the SC

Before you attempt to use SSH or TELNET, make sure that the SC has been configured to enable remote connections. For details on configuring the settings for remote connections, refer to the `setupplatform` command description in the *Sun Fire Midrange System Controller Command Reference Manual*.

▼ To Initiate a Remote Connection With SSH

Note – The SC provides SSH server functionality only. For security reasons, only connections requested by client software running the SSHv2 protocol are accepted by the SSH server on the SC. See "Enabling SSH" on page 86.

- **Type the following at the system prompt:**

```
% ssh schostname
```

where *schostname* is the system controller host name.

The system controller main menu is displayed (see CODE EXAMPLE 2-1).

Note – When using SSH, you can open a maximum of five connections to the system controller at one time.

If you receive the following message while attempting to open a remote connection with SSH

```
ssh_exchange_identification: Connection closed by remote host
```

run the `connections` command from the platform shell on the main SC to determine whether you have reached the connection limit.

▼ To Initiate a Remote Connection With TELNET

- **Type the following at the system prompt:**

```
% telnet schostname
Trying xxx.xxx.xxx.xxx
Connected to schostname.
Escape character is '^]'.
```

where *schostname* is the system controller host name.

The system controller main menu is displayed (see CODE EXAMPLE 2-1).

▼ To Bypass the SC Main Menu When Using TELNET

To bypass the SC main menu, use a *port number* as an additional argument to the `telnet` command (the *port_number* argument is not available for `ssh`). You can make a remote connection to the platform shell, a domain shell (if the specified domain is inactive), or a domain console (if the specified domain is active).

- **Type the following:**

```
% telnet schostname port_number
```

where *schostname* is the system controller host name and the *port_number* is one of the following:

- 5000 – Platform Shell
- 5001 – Domain A
- 5002 – Domain B
- 5003 – Domain C
- 5004 – Domain D

Using the SC Main Menu

This section describes the SC main menu.

▼ To Select Destinations From the SC Main Menu

1. **Access the SC main menu by initiating a serial or remote connection to the SC.**

   The SC main menu is displayed. CODE EXAMPLE 2-1 shows the SC main menu, where *schostname* is the system controller host name. In this example, the selected destination is the platform shell.

CODE EXAMPLE 2-1 Selecting Destinations

```
System Controller 'schostname':

       Type 0 for Platform Shell

       Type 1 for domain A
       Type 2 for domain B
```

CODE EXAMPLE 2-1 Selecting Destinations *(Continued)*

```
        Type 3 for domain C
        Type 4 for domain D

Input: 0

Connected to Platform Shell

schostname:SC>
```

2. **Choose a destination:**
   - Type `0` to enter the platform shell.

     The system controller prompt, *schostname*`:SC>`, is displayed for the platform shell of the main system controller. If you have a redundant SC configuration, the spare system controller prompt is *schostname*`:sc>`.
   - Type `1`, `2`, `3`, or `4` to access the appropriate domain.

     The system controller prompt for the domain you connected to is displayed. For example, the prompt for domain A is *schostname*`:A>`. If the domain is active, you get the domain console. If the domain is inactive, you get the domain shell.

For the definitions of platform shell, domain shell, and domain console, see Chapter 1.

System Controller Navigation

This section describes the navigation procedures summarized in FIGURE 2-1.

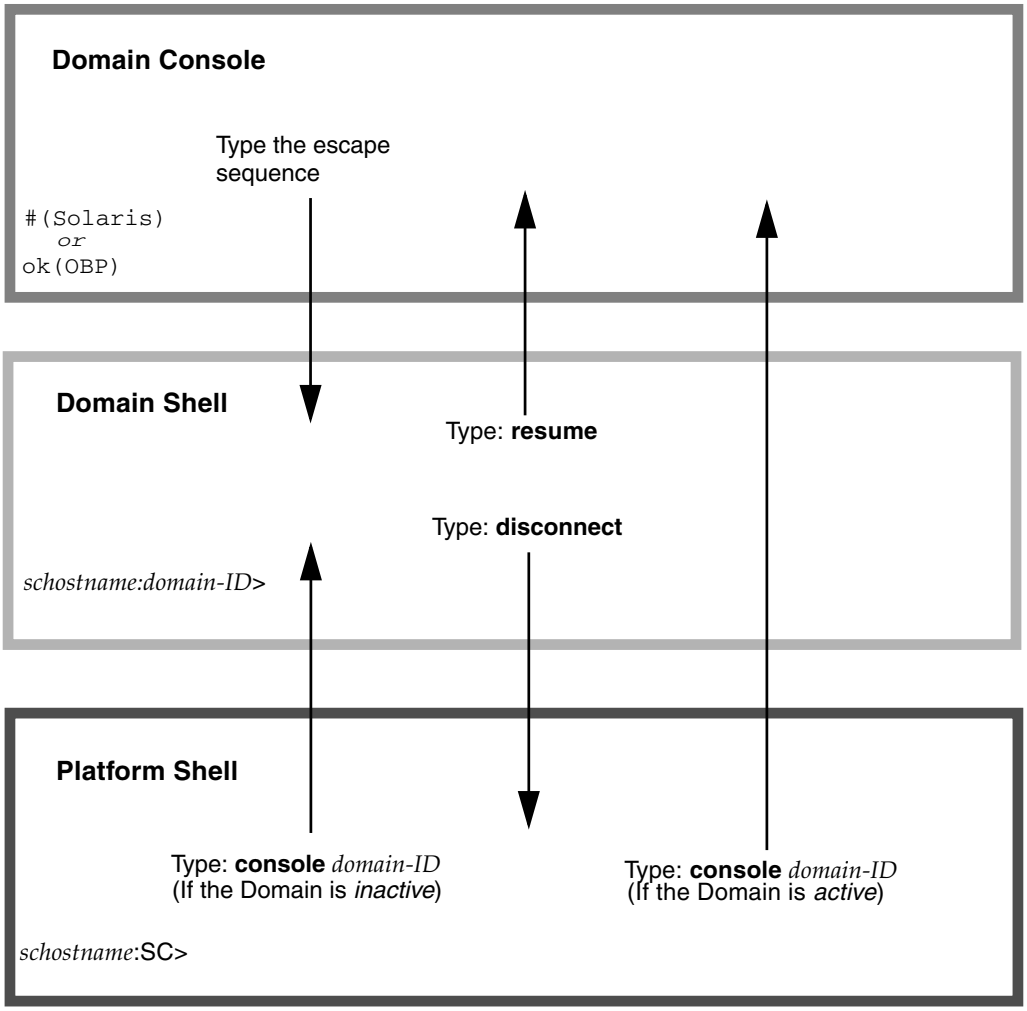

FIGURE 2-1 Navigating Among the Platform Shell, the Domain Shell, and Domain Console

Navigation Diagram Notes

- The default escape sequence to move from a domain console to the domain shell (controlled by the `setescape` command) is the pound sign followed by a period (`#.`).
- For TELNET connections, the standard escape sequence (CRTL `])`, followed by the `send break` command, is also supported.
- Typing the `break` command from the domain shell of an activated domain suspends the Solaris operating environment and brings you to the OpenBoot PROM `ok` prompt.
- Two steps are required to go from a domain console to the platform shell:
  - Apply the escape sequence to go to the domain shell.
  - Type the `disconnect` command to go to the platform shell.

▼ To Navigate Between The Platform Shell And a Domain

Note – This example shows entering an inactive domain from the platform shell.

- **Type the following:**

```
schostname:SC> console -d domain_ID
```

where *domain_ID* is the domain name.

For example, to go to the domain shell for domain a:

```
schostname:SC> console -d a

Connected to Domain A

Domain Shell for Domain A

schostname:A>
```

Note – If the OpenBoot PROM is at the `ok` prompt or the Solaris operating environment is at the `login:` prompt, press the Enter key to see the prompt. Otherwise, you will need to wait for output to be generated by POST, the OpenBoot PROM, or the Solaris operating environment. If the domain is hung, there will be no output. However, when a domain displays no output, it does not necessarily mean that the domain is hung.

If you select a domain that is active (from the SC main menu), you get the domain console instead. An active domain is one in which the OpenBoot PROM is running or the domain keyswitch is set to `on`, `diag`, or `secure`.

- **Type `disconnect` to return to the platform shell.**

▼ To Go From a Domain Console To a Domain Shell

If you choose a domain and that domain is active (the domain keyswitch is set to `on`, `diag`, or `secure` which means you are running the Solaris operating environment, or are in the OpenBoot PROM), you will enter the *domain console.* To exit the domain console and enter the domain shell, perform the following steps

- **Type the escape sequence to get to the domain shell prompt.**

  By default, the escape sequence is **`#.`** (the pound sign, followed by a period).

CODE EXAMPLE 2-2 Obtaining a Domain Shell From the Domain Console

```
ok #.
schostname:A>
```

▼ To Go From a Domain Shell To a Domain Console

1. **If the domain is active, perform the following steps:**

   a. **From the domain shell, type the following:**

```
schostname:D> resume
```

   Note that because the domain is active, you will get a blank line.

   b. **Press the Return key to get a prompt.**

Note – If the domain is not active, (the Solaris operating environment or the OpenBoot PROM is *not* running), the system controller stays in the domain shell and you will obtain an error.

---

2. **If the domain is inactive, activate and initialize the domain by typing the following in the domain shell:**

```
schostname:A> setkeyswitch on
```

The domain console is available only when the domain is active. To make the domain active, you must turn the keyswitch on. You will be automatically switched from the domain shell to the domain console.

The domain will go through POST and then the OpenBoot PROM. If the OpenBoot PROM `auto-boot?` parameter of the `setupdomain` command is set to true, the Solaris operating environment will boot. For details on the domain parameters, refer to the `setupdomain` command description in the *Sun Fire Midrange System Controller Command Reference Manual.*

Terminating Connections to the SC

This section describes how to terminate connections to the system controller.

▼ To Terminate a Serial Connection With `tip`

If you are connected to the System Controller board with the serial port, use the `disconnect` command to terminate the system controller session then use a `tip` command to terminate your `tip` session.

1. **At the domain shell or platform shell prompt, type `disconnect`.**

```
schostname:A> disconnect
```

Note – When you disconnect from a direct connection to a domain shell, you will see nothing. Press the Return key to obtain the prompt.

---

2. **If you are in a domain shell and are connected from the platform shell, type** `disconnect` **again to disconnect from the system controller session.**

```
schostname:SC> disconnect
```

The SC main menu is displayed.

3. **Type** `~.` **to end your** `tip` **session (**CODE EXAMPLE 2-3**).**

CODE EXAMPLE 2-3 Ending a `tip` Session

```
System Controller 'schostname':

       Type 0 for Platform Shell

       Type 1 for domain A
       Type 2 for domain B
       Type 3 for domain C
       Type 4 for domain D

Input: ~.

machinename%
```

The *machinename*`%` prompt is displayed.

▼ To Terminate a Remote Connection

- **If you are connected directly to the domain and *not* from the platform shell, type the** `disconnect` **command at the domain shell prompt.**

  Your system controller session terminates.

```
schostname:A> disconnect
Connection closed by foreign host.
machinename%
```

Note – When you disconnect from a direct connection to a domain shell, you will see nothing. Press the Return key to obtain the prompt.

If you have a connection to the domain *initiated on the platform shell*, you must type `disconnect` twice.

Typing `disconnect` the first time returns you to the platform shell connection and keeps your connection to the system controller. Typing `disconnect` again exits the platform shell and ends your connection to the system controller.

CHAPTER 3

System Power On and Setup

This chapter provides information to enable you to power on your system for the first time and perform software setup procedures using the system controller command-line interface. For instructions on how to subsequently power on your system, see "To Power On the System" on page 65.

Note – When you are setting up your system for the first time, it is strongly suggested that you bring up the one domain set up for you, domain A, by installing the Solaris operating environment in that domain and then booting it before creating additional domains.

Before you create additional domains, make sure that domain A is operational and can be accessed from the main menu, and that you can boot the Solaris operating environment in the domain. It is good policy to validate that one domain, domain A, is functioning properly before you create additional domains. To create additional domains, see Chapter 4.

This chapter contains the following topics:

- "Setting Up the Hardware" on page 45
- "Setting Up the Platform" on page 47
- "Setting Up Domain A" on page 50
- "Saving the Current Configuration to a Server" on page 53
- "Installing and Booting the Solaris Operating Environment" on page 54

FIGURE 3-1 is a flowchart summarizing the major steps you must perform to power on and set up the system. These steps are explained in the procedures presented in this chapter.

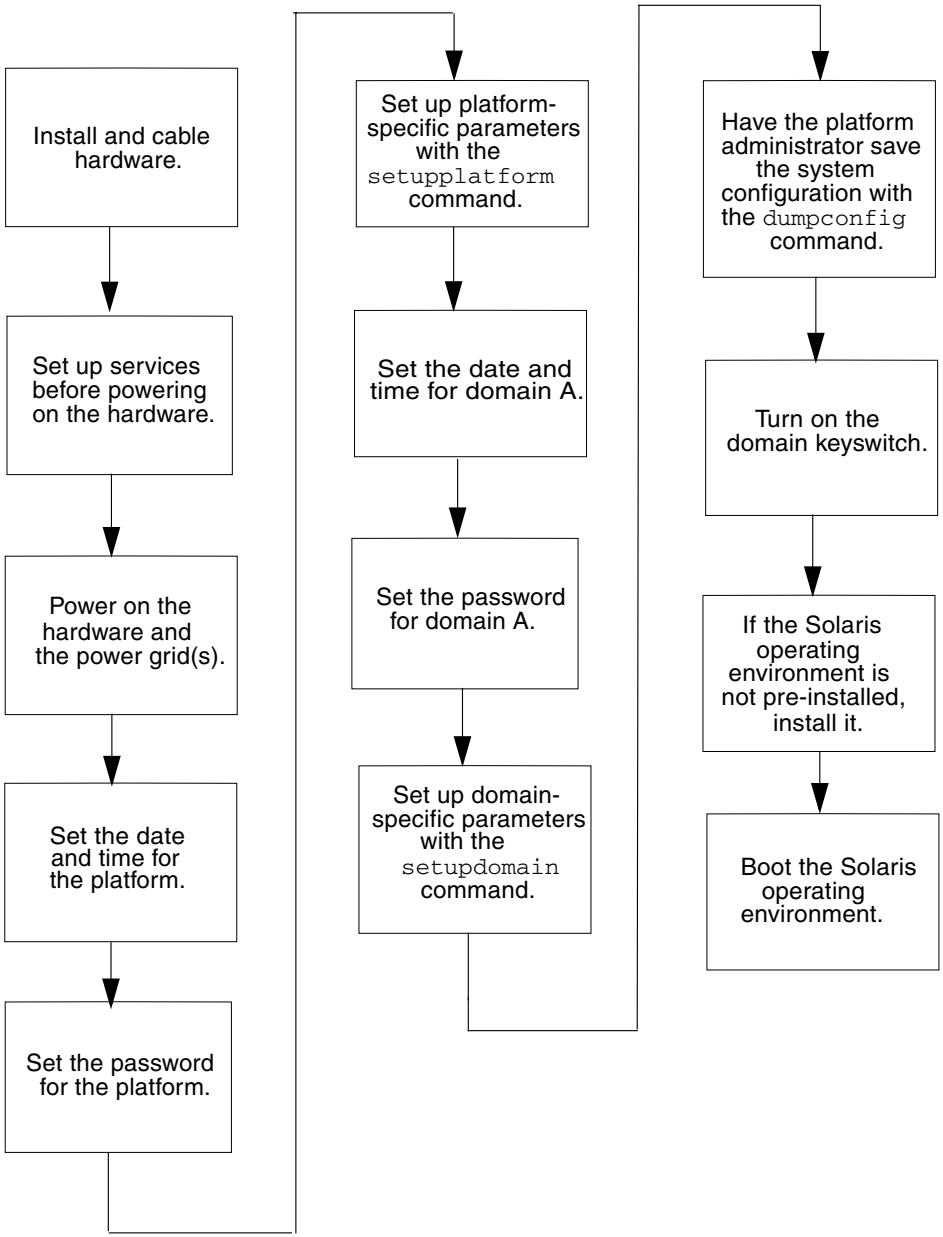

FIGURE 3-1 Flowchart of Power On and System Setup Steps

Setting Up the Hardware

This section contains the following procedures:

- To Install and Cable the Hardware
- To Set Up Additional Services Before System Power On
- To Power On the Hardware
- To Power On the Power Grids

▼ To Install and Cable the Hardware

1. **Refer to the installation guide for your system and connect a terminal to your system using the serial port.**

2. **When you set up the terminal, set the ASCII terminal to the same baud rate as the serial port.**

   The default serial port settings for the System Controller board are:

   - 9600 baud
   - 8 data bits
   - No parity
   - 1 stop bit

   Because this is the platform console connection, log messages are displayed.

▼ To Set Up Additional Services Before System Power On

- **Before you power on the system for the first time, set up the services described in** TABLE 3-1**.**

TABLE 3-1 Services to Be Set Up Before System Power On

Service	Description
DNS services	The system controller uses DNS to simplify communication with other systems.
Sun Management Center software*	Manage and monitor your system by using the Sun Management Center. It is suggested that you use this software to manage and monitor your system.
Network Terminal Server (NTS)	A Network Terminal Server (NTS) is used to help manage multiple serial connections. The NTS should be secured with at least a password.
Boot/install server*	Allows you to install the Solaris operating environment from a network server instead of using a CD-ROM.
HTTP/FTP server*	In order to perform firmware upgrades, you must set up either an HTTP or an FTP server. In order to read/write the configuration backup files for the system controller `dumpconfig` and `restoreconfig` commands, you need to set up an FTP server.
Loghost*	The loghost system is used to collect system controller messages. Is is recommended that you set up a loghost for the platform shell and for each domain shell. To permanently save loghost error messages, you must set up a loghost server. • Use the `setupplatform -p` *loghost* command to output platform messages to the loghost. • Use the `setupdomain -d` *loghost* command to output domain messages to the loghost. For complete information on these commands, refer to their descriptions in the *Sun Fire Midrange System Controller Command Reference Manual*.
System controller	If you plan to put one or more system controllers on a network, each system controller installed must have an IP address and a logical IP address for SC failover purposes. Each system controller should also have a serial connection.
Domains	Each domain you plan to use needs to have its own IP address.

*** It is not necessary to have the loghost set up before you install and boot the Solaris operating environment. You can install the Sun Management Center software after you boot your system for the first time. Because you can install from a CD-ROM, it is not necessary to have a boot/install server set up before system power on.**

▼ To Power On the Hardware

- **Complete the hardware power-on steps detailed and illustrated in the installation guide for your system.**

▼ To Power On the Power Grids

1. **Access the system controller and connect to the system controller main menu.**

   See "Establishing Connections to the SC" on page 31.

2. **Connect to the platform shell.**

3. **Power on the power grid or grids.**

   The `poweron gridx` command powers on power supplies in grid *x*.

   - If you have a Sun Fire E6900 or 6800 system, you must power on power grid 0 and power grid 1.

   ```
   schostname:SC> poweron grid0 grid1
   ```

   - If you have a Sun Fire E4900/4810/4800/3800 system, there is only one power grid, grid 0.

   ```
   schostname:SC> poweron grid0
   ```

   The `poweron grid0` system controller command powers on power supplies in power grid 0.

Setting Up the Platform

After powering on the power grids, set up your system using the commands described in this chapter.

Note – To ensure that you choose the optimum security settings (such as the selection of a remote connection protocol: SSH or Telnet) when you set up the platform, review Chapter 6 before proceeding.

This section contains the following procedures:

- To Set the Date, Time, and Time Zone for the Platform
- To Set a Password for the Platform
- To Configure Platform Parameters

Setting the Platform Date and Time

Although you can set a different date and time for the platform and for each domain, it is strongly suggested that you use the same date and time for the platform and domains. Using the same date and time for the platform shell and each domain shell may help during interpretation of error messages and logs. The date and time set on the domains are also used by the Solaris operating environment.

If you have a redundant SC configuration, the platform date and time settings on both the main and spare system controller must always be synchronized for SC failover purposes. Sun strongly suggests that you configure both the main and spare system controller to synchronize their date and time settings against a Simple Network Time Protocol (SNTP) server.

SNTP, described in RFC 2030, is an adaptation of the Network Time Protocol (NTP), described in RFC 1305. SNTP does not change the NTP specification, but it clarifies certain design features of NTP to allow operation in a simple, stateless remote-procedure call (RPC) mode. SNTP clients such as the Sun Fire midrange SC can interoperate with existing NTP or SNTP clients and servers. SNTP is intended to be used only at the extremities of the time synchronization subnet.

NTP concepts are more fully described in the following Sun BluePrints OnLine articles:

- *Using NTP to Control and Synchronize System Clocks - Part I: Introduction to NTP*
- *Using NTP to Control and Synchronize System Clocks - Part II: Basic NTP Administration and Architecture*
- *Using NTP to Control and Synchronize System Clocks - Part III: NTP Monitoring and Troubleshooting*

These articles are available at:

`http://www.sun.com/blueprints`

▼ To Set the Date, Time, and Time Zone for the Platform

- **Do one of the following:**
  - If you have a redundant SC configuration, assign a SNTP server through the `setupplatform` command.

    For details on the `setupplatform` command, refer to the *Sun Fire Midrange System Controller Command Reference Manual*.

By configuring SNTP on the SCs, the SCs will periodically check the SNTP server to ensure that their date and time are accurate and synchronized. If the main and spare SC do not have the same date and time and an SC failover occurs, a time jump may occur in running domains.

- Use the `setdate` command from the platform shell.

Note – For complete command syntax, examples, a table of time zone abbreviations, time zone names, and offsets from Greenwich mean time, refer to the `setdate` command in the *Sun Fire Midrange System Controller Command Reference Manual*.If your time zone area is using daylight or summer time, the time and time zone are adjusted automatically. On the command line, you can enter only non-daylight time zones.

▼ To Set a Password for the Platform

The system controller password that you set for the main SC also serves as the *same* password for the spare SC.

1. **From the platform shell, type the system controller** `password` **command.**
2. **At the** `Enter new password`**: prompt, type in your password.**
3. **At the** `Enter new password again:` **prompt, type in your password again.**

   For examples, refer to the password command in the *Sun Fire Midrange System Controller Command Reference Manual*.

▼ To Configure Platform Parameters

Note – One of the platform configuration parameters that can be set through the `setupplatform` command is the partition parameter. Determine if you want to set up your system with one partition or two partitions. Read "Domains" on page 2 and "Segments" on page 3 before completing the following steps.

---

1. **From the platform shell, type** `setupplatform`**.**

   For a description of the `setupplatform` parameter values and an example of this command, refer to the `setupplatform` command in the *Sun Fire Midrange System Controller Command Reference Manual*.

```
schostname:SC> setupplatform
```

Note – If you want to use a loghost, you must set up a loghost server. You can then assign a platform loghost by using the `setupplatform` command to specify the `Loghost` (using either an IP address or a host name) and the `Log Facility`.

Note – If you press the Return key after each parameter, the current value will not be changed. If you type a dash (-), this clears the entry (if the entry can be blank).

---

2. **If you have a second System Controller board installed, run the `setupplatform` command on the second system controller.**

   All the parameters, except for the network settings (such as the IP address and host name of the system controller) and the POST diag level, are copied from the main system controller to the spare, only when SC failover is enabled.

Setting Up Domain A

This section contains the following procedures on setting up domain A.

- To Access the Domain
- To Set the Date and Time for Domain A
- To Set a Password for Domain A
- To Configure Domain-Specific Parameters

▼ To Access the Domain

- **Access the domain.**

  For more information, see "System Controller Navigation" on page 36.

▼ To Set the Date and Time for Domain A

- **Type the `setdate` command in the domain A shell to set the date and time for the domain.**

Note – Because you can have up to four domains on an E6900 or 6800 system, you must eventually set the date and time for *each* domain. To start, just set the date and time for domain A.

For command syntax and examples, refer to the `setdate` command description in the *Sun Fire Midrange System Controller Command Reference Manual* and the "To Set the Date, Time, and Time Zone for the Platform" on page 48.

▼ To Set a Password for Domain A

1. **From the domain A shell, type the `password` command (CODE EXAMPLE 3-1).**
2. **At the `Enter new password`: prompt, type your password.**
3. **At the `Enter new password again:` prompt, type your password again (CODE EXAMPLE 3-1).**

CODE EXAMPLE 3-1 `password` Command Example For a Domain With No Password Set

```
schostname:A> password
Enter new password:
Enter new password again:
schostname:A>
```

▼ To Configure Domain-Specific Parameters

Note – Each domain is configured separately.

---

1. **From the domain A shell, type the `setupdomain` command.**

   For a listing of parameter values and sample output, refer to the `setupdomain` command description in the *Sun Fire Midrange System Controller Command Reference Manual*.

   To facilitate the ability to restore domain A, set the following `setupdomain` parameter value as indicated:

   - `diag-level` to `default`

All system board components are tested with all tests and test patterns, except for memory and Ecache modules. For memory and Ecache modules, all locations are tested with multiple patterns. More extensive, time-consuming algorithms are not run at this level.

- `post-tolerate-ce` to `false`

  Memory modules exhibiting correctable ECC errors are to be disabled during post and not allowed to enter the Solaris domain.

- `reboot-on-error` to `true`

  When a hardware error occurs, the system controller pauses the domain. This setting controls the automatic restoration of domains after the auto-diagnosis (AD) engine identifies and, if possible, deconfigures components associated with a domain hardware error. See "Automatic Diagnosis and Recovery Overview" on page 99 for details.

- `hang-policy` to `reset`

  The system controller automatically resets a hung domain when the domain does not respond to interrupts or the domain heartbeat stops.

Note – Is is recommended that you set up a loghost server. You can then assign a loghost for each domain by using the `setupdomain` command to specify the `Loghost` (using either an IP address or a host name) and the `Log Facility`.

---

2. **Perform steps listed in** TABLE 3-2**.**

TABLE 3-2 Steps in Setting Up Domains Including the `dumpconfig` Command

If you are setting up one domain . . .	If you are setting up more than one domain . . .
1. Continue with the procedures in this chapter.	1. Install and boot the Solaris operating environment on domain A as described in "To Install and Boot the Solaris Operating Environment" on page 54. 2. Go to Chapter 4 for instructions on creating additional domains. 3. After all the domains are set up and before you start each additional domain you set up, have the platform administrator run the `dumpconfig` command. See "To Use `dumpconfig` to Save Platform and Domain Configurations" on page 53.

Saving the Current Configuration to a Server

This section describes how to use the `dumpconfig` command, which must be run by the platform administrator, to save the current system controller (SC) configuration to a server. Use `dumpconfig` to save the SC configuration for recovery purposes.

Use the `dumpconfig` command when you perform any of the following tasks:

- First set up your system and need to save the platform and domain configurations
- Change the platform and domain configurations with one of the following system controller commands (`setupdomain`, `setupplatform`, `setdate`, `addboard`, `deleteboard`, `setls`, `password`) or install and remove a CPU/Memory board or I/O assembly

▼ To Use `dumpconfig` to Save Platform and Domain Configurations

Use `dumpconfig` to save the platform and domain configurations to a server so that you can restore the platform and domain configurations to a replacement system controller (if the current system controller fails).

Note – *Do not* save the configuration to any domain on the platform, because the domain will not be available if the platform fails.

● **Type the system controller `dumpconfig` command from the platform shell to save the present system controller configuration to a server.**

```
schostname:SC> dumpconfig -f url
```

For details, refer to the `dumpconfig` command description in the *Sun Fire Midrange System Controller Command Reference Manual*.

Installing and Booting the Solaris Operating Environment

▼ To Install and Boot the Solaris Operating Environment

1. **Access the domain A shell.**

   See "To Navigate Between The Platform Shell And a Domain" on page 37.

2. **Turn the domain A keyswitch to the on position. Type `setkeyswitch on`.**

   The `setkeyswitch on` command powers on the domain. If the OpenBoot PROM `auto-boot?` parameter is set to true, you might obtain an error message similar to CODE EXAMPLE 3-2.

   CODE EXAMPLE 3-2 Sample Boot Error Message When the `auto-boot?` Parameter Is Set to `true`

   ```
   {0} ok boot
       ERROR: Illegal Instruction
       debugger entered.

       {0} ok
   ```

   The OpenBoot PROM (OBP) displays this error message because the Solaris operating environment might not yet be installed, or perhaps you are booting off the wrong disk. For more information on OBP parameters, refer to the `setupdomain` command description in the *Sun Fire Midrange System Controller Command Reference Manual* and also the *OpenBoot Command Reference Manual* included with your Solaris operating environment release.

3. **Insert the CD for the Solaris operating environment into the CD-ROM drive.**

4. **Install the Solaris operating environment on your system.**

   Refer to the *Solaris Installation Guide* included with your operating environment release.

5. **Boot the Solaris operating system by typing the OpenBoot PROM `boot cdrom` command at the `ok` prompt.**

   ```
   ok boot cdrom
   ```

CHAPTER 4

Creating and Starting Multiple Domains

This chapter explains how to create additional domains and how to start domains. This chapter assumes that domain A, which was set up for you by Sun, is now bootable.

Note – The system is shipped from the factory configured with one domain, domain A. All system boards are assigned to domain A.

Creating and Starting Domains

This section contains the following procedures:

- To Create Multiple Domains
- To Create a Second Domain
- To Create a Third Domain on a Sun Fire E6900 or 6800 System
- To Start a Domain

Using UltraSPARC IV+ System Boards in Domains

You can mix system boards in your Sun Fire E6900 or 6800 system configurations. The combinations of system boards affect the domain configurations that you can create. You can employ UltraSPARC IV+ system boards in one domain only per partition.

Domain configuration options are illustrated in TABLE 4-1

TABLE 4-1 Sun Fire E6900 or 6800 System Domain System Board Combinations

Configuration	Domain A	Domain B	Domain C	Domain D	setupplatform usiv+ Variable
US IV+ in two domains	US III+ US IV US IV+	Off	US III+ US IV US IV+	Off	a, c = true
US IV+ in one domain	US III+ US IV US IV+	Off	US III+ US IV	US III+ US IV	a = true
US IV+ in one domain	US III+ US IV	US III+ US IV	US III+ US IV US IV+	Off	c = true
US IV+ in no domains	US III+ US IV	US III+ US IV	US III+ US IV	US III+ US IV	N/A

Similar considerations apply when configuring domains in Sun Fire E4900 or 4800 systems. See TABLE 4-2

TABLE 4-2 Sun Fire E4900 or 4800 System Domain System Board Combinations

Configuration	Domain A	Domain C	setupplatform usiv+ Variable
US IV+ in two domains	US III+ US IV US IV+	US III+ US IV US IV+	a, c = true
US IV+ in one domain	US III+ US IV US IV+	US III+ US IV	a = true
US IV+ in one domain	US III+ US IV	US III+ US IV US IV+	c = true
US IV+ in no domains	US III+ US IV	US III+ US IV	N/A

▼ To Enable UltraSPARC IV+ Domain Support

- **Use the** `setupplatform` **command to change** `usiv+` **support for Domains A or C**

  For example,

```
schostname:A> setuppl -p usiv+

UltraSPARC IV+ Configuration
----------------------------
Is UltraSPARC IV+ going to be deployed in domain A? [false]: true
Is UltraSPARC IV+ going to be deployed in domain C? [false]:
```

For further information about the `setupplatform` command, see the *Sun Fire Midrange System Controller Command Reference Manual.*

Note – The `usiv+` option can be changed *only* while all domains in the affected partitions are off. For information about using the `setkeyswitch` command to power domains on and off, see the *Sun Fire Midrange System Controller Command Reference Manual.*

▼ To Display the Status of UltraSPARC IV+ Domain Support

- **Use the** `showplatform -p usiv+` **command**

  For example,

```
schostname:A> showplatform -p usiv+

UltraSPARC IV+ is supported in domain A
UltraSPARC IV+ is not supported in domain C
```

▼ To Create Multiple Domains

1. **Determine how many domains you can have in your system and how many partitions you need.**

   Read "Domains" on page 2 and "Segments" on page 3. If you have a Sun Fire E6900 or 6800 system and you are planning to set up three or four domains, you will need to set up dual-partition mode (two partitions). It might be helpful to maintain at least one unused domain for testing hardware before dynamically reconfiguring it into the system.

   Note – For all systems, it is strongly suggested that you use dual partition mode to support two domains. Using two partitions to support two domains provides better isolation between domains.

   ---

2. **Determine the number of boards and assemblies that will be in each domain.**

   A domain must contain a minimum of one CPU/Memory board and one I/O assembly. However, it is suggested that you have at least two CPU/Memory boards and I/O assemblies for high-availability configurations.

   If you have a Sun Fire E6900 or 6800 system, it is strongly suggested that you set up boards in a domain to be in the same power grid to isolate the domain from a power failure.

   Sun Fire E6900 and 6800 systems have two power grids, grid 0 and grid 1. For information on how boards are divided between grid 0 and grid 1, see "Power" on page 18.

3. **If you need to configure two partitions, turn off all domains. Otherwise, skip to Step 4.**

   a. **If the Solaris operating environment is running, enter the domain console you want to power off.**

      See "To Navigate Between The Platform Shell And a Domain" on page 37.

   b. **If the Solaris operating environment is running, log in as superuser and halt the operating environment:**

   ```
   root# init 0
   ok
   ```

      You will see the OpenBoot PROM `ok` prompt when the Solaris operating environment is shut down.

   c. **From the `ok` prompt, obtain the domain shell prompt.**

i. **Press and hold the CTRL key while pressing the] key to get to the** `telnet>` **prompt.**

ii. **At the** `telnet>` **prompt, type** `send break`**:**

```
ok CTRL ]
telnet> send break
schostname:A>
```

The domain shell prompt is displayed.

d. **Turn the domain keyswitch to the off position with the** `setkeyswitch off` **command:**

```
schostname:A> setkeyswitch off
```

e. **Disconnect from the session by typing the** `disconnect` **command:**

```
schostname:A> disconnect
```

f. **Configure the partition mode to dual.**

Refer to the `setupplatform` command in the *Sun Fire Midrange System Controller Command Reference Manual*.

4. **If the board that you plan to assign to a new domain is currently used by domain A, shut down domain A or use DR to unconfigure and disconnect the board out of the domain.**

- To shut down the domain, repeat Steps 3a through 3e.
- If you are using dynamic reconfiguration, use the `cfgadm` command to remove the board from the domain without shutting down the domain. Refer to the *Sun Fire Midrange Systems Dynamic Reconfiguration User Guide*.

▼ To Create a Second Domain

Note – It is strongly suggested that domain C, with two partitions (dual-partition mode), be used as your second domain. It provides better fault isolation (complete isolation of Repeater boards). With one partition, use domain B for the second domain.

Note – The steps to create a second domain should be performed by the platform administrator.

---

1. **Complete all steps in** **"To Create Multiple Domains" on page 58****.**

2. **If you have boards that are assigned, type the following from the platform shell to unassign the boards that will be moved from one domain to another domain:**

```
schostname:SC> deleteboard sbx ibx
```

where:

`sbx` is `sb0` through `sb5` (CPU/Memory boards)

`ibx` is `ib6` through `ib9` (I/O assemblies)

3. **Assign the boards to the new domain with the** `addboard` **command.**

- If you have one partition, to add `sbx` and `ibx` to domain B, from the platform shell, type:

```
schostname:SC> addboard -d b sbx ibx
```

- If you have two partitions, to add `sbx` and `ibx` to domain C, from the platform shell, type:

```
schostname:SC> addboard -d c sbx ibx
```

4. **From the platform shell, access the proper domain shell.**

   See "System Controller Navigation" on page 36.

5. **Set the date and time for the second domain.**

   Set the date and time for the second domain in exactly the same way you set the date and time for domain A. For an example of the `setdate` command, refer to the `setdate` command in the *Sun Fire Midrange System Controller Command Reference Manual*.

6. **Set a password for the second domain.**

   Set the password for the second domain in exactly the same way you set the password for domain A. For an example of the `password` command, refer to the `password` command in the *Sun Fire Midrange System Controller Command Reference Manual*.

7. **Configure domain-specific parameters for the new domain by using the `setupdomain` command.**

   You configure domain-specific parameters for each domain separately.

   Note – Is is recommended that you set up a loghost server and then assign the loghost for the domain shell. Use the `setupdomain` command to assign a loghost for the domain shell. See "To Configure Domain-Specific Parameters" on page 51.

   For more details, tables, and code examples, refer to the `setupdomain` command in the *Sun Fire Midrange System Controller Command Reference Manual*.

8. **After creating all domains, have the platform administrator save the state of the configuration with the `dumpconfig` command.**

   For details on using `dumpconfig`, see the procedure "Saving the Current Configuration to a Server" on page 53.

9. **Start each domain after all domains have been created.**

   Go to "To Start a Domain" on page 62.

▼ To Create a Third Domain on a Sun Fire E6900 or 6800 System

You create three domains in exactly the same way that you create two domains.

1. **If the platform is configured as a single partition, complete Step 3a through 3e in "To Create Multiple Domains" on page 58 to halt the Solaris operating environment for all active domains before changing partition mode.**

2. **Configure partition mode to dual by using the `setupplatform` command.**

3. **Decide which domain needs higher performance. Plan to assign the third domain to the partition that requires the lowest performance.**

   TABLE 4-3 provides some best-practice guidelines to follow.

TABLE 4-3 Guidelines for Creating Three Domains on Sun Fire E6900 or 6800 System

Description	Domain IDs
Use these domain IDs if domain A requires higher performance and more hardware isolation.	A, C, D
Use these domain IDs if domain C requires higher performance and more hardware isolation.	A, B, C

On Sun Fire E4900/4810/4800/3800 systems, when you set the partition mode to dual, this moves the MAC address and the host ID from domain B to domain C. Use the `showplatform -p mac` command to view the settings.

4. **Perform all steps in the procedure "To Create a Second Domain" on page 59 to create the third domain.**

▼ To Start a Domain

1. **Connect to the domain shell for the domain you want to start.**

   See "System Controller Navigation" on page 36.

2. **Turn the keyswitch on.**

```
schostname:C> setkeyswitch on
```

   The OpenBoot PROM prompt is displayed.

3. **Install and boot the Solaris operating environment in the domain.**

   Refer to the *Solaris Installation Guide* included with your operating environment release.

CHAPTER 5

General Administration

This chapter explains how to perform the following administrative and maintenance procedures:

- "Powering Off and On the System" on page 63
- "Setting Keyswitch Positions" on page 67
- "Shutting Down Domains" on page 68
- "Assigning and Unassigning Boards" on page 68
- "Setting PCI Mode" on page 73
- "Swapping Domain HostID/MAC Addresses" on page 74
- "Upgrading the Firmware" on page 78
- "Saving and Restoring Configurations" on page 79

Powering Off and On the System

To power off the system, you must halt the Solaris operating environment in each domain and power off each domain.

Before you begin this procedure, have the following books available:

- *Sun Fire 6800/4810/4800/3800 Systems Service Manual* or the *Sun Fire E6900/E4900 Systems Service Manual*
- *Sun Hardware Platform Guide* (available with your version of the Solaris operating environment)

Note – If you have a redundant system controller configuration, review "Conditions That Affect Your SC Failover Configuration" on page 117 before you power cycle your system.

Powering Off the System

When you power off the system, power off all of the active domains. Then power off the power grid or grids. The last step is to power off the hardware.

▼ To Power Off the System

1. **Connect to the appropriate domain shell.**

   See "System Controller Navigation" on page 36.

2. **Type the following from the platform shell to display the status of all domains:**

```
schostname:SC> showplatform -p status

Domain    Solaris Nodename    Domain Status            Keyswitch
--------  ------------------  -----------------------  -----------
A         nodename-a          Active - Solaris         on
B         -                   Powered Off              off
C         -                   Powered Off              off
D         -                   Powered Off              off
schostname:SC>
```

3. **Complete the following substeps for each active domain.**

   These substeps include halting the Solaris operating environment in each domain, turning off the domain keyswitch, and disconnecting from the session.

   a. **Enter the domain console you want to power off.**

      See "To Navigate Between The Platform Shell And a Domain" on page 37.

   b. **If the Solaris operating environment is running, log in as superuser and halt the operating environment:**

```
root# init 0
ok
```

   c. **You will see the OpenBoot PROM `ok` prompt when the Solaris operating environment is shut down.**

   d. **From the `ok` prompt, obtain the domain shell prompt.**

      i. **Press and hold the CTRL key while pressing the] key to get to the `telnet>` prompt.**

ii. At the `telnet>` prompt, type `send break`:

```
ok CTRL ]
telnet> send break
schostname:A>
```

The domain shell prompt is displayed.

e. Turn the domain keyswitch to the off position with the `setkeyswitch off` command:

```
schostname:A> setkeyswitch off
```

f. Disconnect from the session by typing the `disconnect` command:

```
schostname:A> disconnect
```

4. Access the platform shell (see "To Select Destinations From the SC Main Menu" on page 34) and power off the power grids to power off the power supplies.

- If you have a Sun Fire E6900 or 6800 system, you must power off power grids 0 and 1:

```
schostname:SC> poweroff grid0 grid1
```

- If you have a Sun Fire E4900/4810/4800/3800 system, there is only one power grid, grid 0. Power off power grid 0:

```
schostname:SC> poweroff grid0
```

5. Power off the hardware in your system.

Refer to the "Powering Off and On" chapter of the *Sun Fire 6800/4810/4800/3800 Systems Service Manual* or the *Sun Fire E6900/E4900 Systems Service Manual*.

▼ To Power On the System

1. Power on the hardware.

Refer to the "Powering Off and On" chapter of the *Sun Fire 6800/4810/4800/3800 Systems Service Manual* or the *Sun Fire E6900/E4900 Systems Service Manual*.

2. **Access the system controller platform shell.**

   See "To Select Destinations From the SC Main Menu" on page 34.

3. **Power on the power grids.**

   - If you have a Sun Fire E6900 or 6800 system, power on power grid 0 and power grid 1:

```
schostname:SC> poweron grid0 grid1
```

   - If you have a Sun Fire E4900/4810/4800/3800 system, only one power grid, grid 0, exists:

```
schostname:SC> poweron grid0
```

4. **Boot each domain.**

   a. **Access the domain shell for the domain you want to boot.**

      See "To Navigate Between The Platform Shell And a Domain" on page 37.

   b. **Boot the domain with the system controller** `setkeyswitch on` **command.**

```
schostname:A> setkeyswitch on
```

      This command turns on the domain and boots the Solaris operating environment if the OpenBoot PROM `auto-boot?` parameter is set to `true` and the OpenBoot PROM `boot-device` parameter is set to the proper boot device.

      Use the `setupdomain` command (`OBP.auto-boot?` parameter), which is run from a domain shell, or the OpenBoot PROM `setenv auto-boot? true` command to control whether the Solaris operating environment auto boots when you turn the keyswitch on. For more information on the OpenBoot PROM parameters, see the *OpenBoot Command Reference Manual* included with your Solaris operating environment release.

   c. **Do one of the following:**

      - If the Solaris operating environment booted automatically, go to Step 5.
      - If the Solaris operating environment did not boot automatically (it *will not* boot automatically if the OpenBoot PROM `auto-boot?` parameter is set to false), you will see the `ok` prompt.

At the ok prompt, type the boot command to boot the Solaris operating environment:

```
ok boot
```

After the Solaris operating environment is booted, the `login:` prompt is displayed.

```
login:
```

5. **To access and boot another domain, repeat Step 4.**

Setting Keyswitch Positions

Each domain has a virtual keyswitch with five positions: off, standby, on, diag, and secure. The `setkeyswitch` command in the domain shell changes the position of the virtual keyswitch to the specified value. The virtual keyswitch replaces the need for a physical keyswitch for each domain. This command is also available, with limited functionality, in the platform shell.

For command syntax, examples, descriptions of `setkeyswitch` parameters, and results when you change the keyswitch setting, see the `setkeyswitch` command in the *Sun Fire Midrange System Controller Command Reference Manual*.

Caution – During the `setkeyswitch` operation, heed the following precautions:

– Do not power off any boards assigned to the domain.
– Do not reboot the system controller.

▼ To Power On a Domain

1. **Access the domain you want to power on.**

   See "System Controller Navigation" on page 36.

2. **Set the keyswitch to `on`, `diag`, or `secure`, using the system controller `setkeyswitch` command.**

Shutting Down Domains

This section describes how to shut down a domain.

▼ To Shut Down a Domain

1. **Connect to the domain console of the domain you want to shut down.**

   See "System Controller Navigation" on page 36.

   From the domain console, if the Solaris operating environment is booted you will see the `%` , `#`, or `login:` prompt.

2. **If the Solaris operating environment is running, halt the Solaris operating environment from the domain console as superuser.**

```
root# init 0
ok
```

3. **Enter the domain shell from the domain console.**

   See "To Go From a Domain Console To a Domain Shell" on page 38.

4. **In the domain shell, type:**

```
schostname:A> setkeyswitch off
```

5. **If you need to completely power off the system, see "Powering Off and On the System" on page 63.**

Assigning and Unassigning Boards

When you assign a board to a domain, the board must be listed in the access control list (ACL) for the domain. It *cannot* be already assigned to another domain. The ACL is checked only when you assign a board to a domain. If the board is assigned to a domain when the domain is active, the board *is not* automatically configured to be part of that domain.

- For an overview of steps on assigning and unassigning boards to or from a domain with and without dynamic reconfiguration (DR), see TABLE 5-1 and TABLE 5-2.
- For complete step-by-step procedures *without* using dynamic reconfiguration, see "To Assign a Board to a Domain" on page 69 and "To Unassign a Board From a Domain" on page 72.
- For procedures that use dynamic reconfiguration, refer to the *Sun Fire Midrange Systems Dynamic Reconfiguration User Guide*.

TABLE 5-1 Overview of Steps to Assign a Board to a Domain

To Assign a Board to a Domain Using DR	To Assign a Board to a Domain Without Using DR
1. Assign the disconnected and isolated board to the domain with the `cfgadm -x assign` command. 2. Use DR to configure the board into the domain. Refer to the *Sun Fire Midrange Systems Dynamic Reconfiguration User Guide*.	1. Assign the board to the domain with the `addboard` command. 2. Halt the Solaris operating environment in the domain. 3. Shut down the domain with `setkeyswitch standby`. 4. Turn on the domain with `setkeyswitch on`.

TABLE 5-2 Overview of Steps to Unassign a Board From a Domain

To Unassign a Board From a Domain Using DR	To Unassign a Board From a Domain Without Using DR
1. Use DR to unconfigure the board from the domain. Refer to the *Sun Fire Midrange Systems Dynamic Reconfiguration User Guide*. 2. Unassign the board from the domain with the `cfgadm -c disconnect -o unassign` command.	1. Halt the Solaris operating environment in the domain. 2. Turn the keyswitch to standby mode with `setkeyswitch standby`. 3. Unassign the board from the domain with the `deleteboard` command. 4. Turn on the domain with `setkeyswitch on`.

▼ To Assign a Board to a Domain

Note – This procedure *does not* use dynamic reconfiguration (DR).

---

1. **Access the domain shell for the domain to which the board will be assigned.**

   See "To Go From a Domain Console To a Domain Shell" on page 38 and "To Go From a Domain Shell To a Domain Console" on page 38.

2. **Type the `showboards` command with the `-a` option to find available boards that can be used in the domain.**

   In the domain shell, the command output lists boards that are in the current domain. You can assign any board that is not yet assigned to a particular domain, but the board must be listed in the access control list (ACL).

CODE EXAMPLE 5-1 `showboards -a` Example Before Assigning a Board to a Domain

```
schostname:A> showboards -a

Slot      Pwr Component Type                State      Status     Domain
----      --- --------------                -----      ------     ------
/N0/SB0   On  CPU Board V3                  Active     Not tested A
/N0/IB6   On  CPU Board V3                  Active     Not tested A
```

3. **Determine if the board is listed in the `showboards -a` output.**
   - If the board to be assigned to the domain is listed in the `showboards -a` output, go to Step 4.
   - If the board to be assigned to the domain is not listed in the `showboards -a` output, complete the following substeps.

   a. **Make sure that the board has *not* been assigned to another domain by running the `showboards` command in the platform or domain shell.**

      A board *cannot* be assigned to the current domain if it belongs to another domain.

   b. **Verify that the board is listed in the ACL for the domain.**

      Use the `showplatform -p acls` command (platform shell) or the `showdomain -p acls` command (domain shell).

   c. **If the board is *not listed* in the ACL for the desired domain, use the `setupplatform -p acls` command from the platform shell to add the board to the ACL for the domain.**

      See "To Configure Platform Parameters" on page 49.

4. **Assign the proper board to the desired domain with the `addboard` command.**

   The board must be in the Available board state. For example, to assign CPU/Memory board, `sb2`, to the current domain, type:

```
schostname:A> addboard sb2
```

   The new board assignment takes effect when you change the domain keyswitch from an inactive position (off or standby) to an active position (on, diag, or secure) using the system controller `setkeyswitch` command.

   Assigning a board to a domain does not automatically make that board part of an active domain.

5. **If the domain is active (the domain is running the Solaris operating environment, the OpenBoot PROM, or POST), complete this step.**

   - If the Solaris operating environment is running in the domain, log in as superuser to the Solaris operating environment and halt it. For details on how to halt a domain running the Solaris operating environment, refer to the *Sun Hardware Platform Guide*.
   - If the OpenBoot PROM or POST is running, wait for the `ok` prompt.

   a. **Obtain the domain shell.**

      See "To Go From a Domain Console To a Domain Shell" on page 38.

   b. **Shut down the domain by typing the following command:**

```
schostname:A> setkeyswitch standby
```

      By setting the domain keyswitch to standby instead of off, the boards in the domain do not need to be powered on and tested again. Setting the keyswitch to standby also decreases downtime.

   c. **Turn the domain on by typing the following command:**

```
schostname:A> setkeyswitch on
```

Note – Rebooting the Solaris operating environment without using the `setkeyswitch` command does not configure boards that are in the Assigned board state into the active domain.

---

d. **If your environment is not set to boot the Solaris operating environment automatically in the domain after you turned the keyswitch on, boot the operating environment by typing `boot` at the `ok` prompt.**

```
ok boot
```

Note – Setting up whether the Solaris operating environment automatically boots or not when you turn the keyswitch on is done either with the `setupdomain` command (`OBP.auto-boot?` parameter), which is run from a domain shell, or with the OpenBoot PROM `setenv auto-boot? true` command. For more information on the OpenBoot PROM parameters, see the *OpenBoot Command Reference Manual* included in the Sun Hardware Documentation set for your operating environment release.

▼ To Unassign a Board From a Domain

Note – This procedure *does not* use dynamic reconfiguration (DR).

Unassign a board from a domain with the `deleteboard` command. For a complete description of the `deleteboard` command, see the *Sun Fire Midrange System Controller Command Reference Manual*.

Note – When you unassign a board from a domain, the domain must not be active. This means it must not be running the Solaris operating environment, the OpenBoot PROM, or POST. The board you are unassigning must be in the Assigned board state.

---

1. **Halt the Solaris operating environment in the domain.**

```
root# init 0
ok
```

2. **Enter the domain shell for the proper domain.**

   See "System Controller Navigation" on page 36.

3. **Turn the domain keyswitch off with `setkeyswitch off`.**

4. **Type the `showboards` command to list the boards assigned to the current domain.**

5. **Unassign the proper board from the domain with the `deleteboard` command:**

```
schostname:A> deleteboard sb2
```

6. **Turn on the domain by typing the following command:**

```
schostname:A> setkeyswitch on
```

7. **If your environment is not set to automatically boot the Solaris operating environment in the domain, boot the operating environment.**

```
ok boot
```

Setting PCI Mode

This release of system firmware (5.19.0) supports the installation of both PCI and PCI-X cards in PCI-X I/O boards on Sun Fire midrange systems. By default, the firmware enables PCI-X mode on any I/O cards installed into a PCI-X I/O board.

Note – Earlier generation (non-PCI-X) PCI I/O boards are ignored by the PCI-X software, and require no additional user administration.

Caution – While PCI-X I/O boards support both PCI-X and PCI I/O cards, you must use the `forcepci` command to specify the appropriate mode of operation for (non-PCI-X) PCI cards. The `forcepci` command enables you to change the mode from the default (PCI-X mode which has a maximum speed of 100 MHz), to PCI mode (which has a maximum speed of 66 MHz).

▼ To Set a PCI Board to PCI Mode

- **Use the** `forcepci` *board_specification* `on` **Command**

  The command in this example, changeds the default operating mode of the card in PCI-X board slot IB7/P0/B0 to PCI mode. The mode change takes effect after the next power cycle of the IO assembly.

```
schostname:SC> forcepci IB7/P0/B0 on
```

▼ To Display The Mode Status of a PCI Board

- **Use the** `forcepci` *board_specification* `info` **Command**

  This command used in this example displays the mode status of the card in the specified PCI-X board slot.

```
schostname:SC> forcepci IB7/P0/B0 info
IB7/P0/B0 is in forced PCI mode
```

▼ To Set a PCI Board to PCI-X Mode

- **Use the** `forcepci` *board_specification* `off` **Command**

  The command in this example changes the default operating mode of the card in board slot IB7/P0/B0 to PCI-X mode (the default mode). The mode change takes effect after the next power cycle of the IO assembly.

```
schostname:SC> forcepci IB7/P0/B0 off
```

Swapping Domain HostID/MAC Addresses

The `HostID/MAC Address Swap` parameter of the `setupplatform` command enables you to swap the HostID/MAC address of one domain with that of another. This feature is useful when host-licensed software is tied to a particular domain

HostID and MAC address, but you need to run that host-licensed software on another domain. You can swap the domain HostID/MAC address with that of an available domain and then run the host-licensed software on the available domain, without encountering license restrictions tied to the original domain HostID/MAC address.

▼ To Swap the HostID/MAC Address Between Two Domains

Note – If you want to downgrade from release 5.16.0 (or greater) to an earlier firmware release, you must restore the original domain HostID/MAC address assignments before performing the downgrade. For details, see "To Restore the HostID/MAC Address Swapped Between Domains" on page 77. If you have a midrange system that contains boards with UltraSPARC IV CPUs, you cannot downgrade the firmware to a version before 5.16.0 because those processors are not supported by firmware releases earlier than 5.16.0.

---

1. **From the platform shell on the main SC, type:**

```
schostname:SC> setupplatform -p hostid
```

The `HostID/MAC Address Swap` parameters are displayed.

2. **Select the domain pair involved in the HostID/MAC address swap.**

One of domains selected must be the domain on which the host-licensed software currently runs. The other domain selected must be an available domain on which the host-licensed software is to run. The domains selected must not be active.

For example:

```
HostID/MAC Address Swap
-----------------------
Domain to swap HostID/MAC address [A,B,C,D]: b
Domain to swap HostID/MAC address with [A,B,C,D]: d
Commit swap? [no]: y
```

The HostID/MAC addresses of the specified domains are swapped when you commit the swap.

3. **Indicate whether you want to swap the HostID/MAC addresses between another pair of domains.**

```
Swap HostIDs/MAC addresses of another pair of Domains? [no]: n
```

4. **To verify the HostID/MAC address swap, type:**

```
schostname:SC> showplatform -p hostid
```

For example:

```
schostname:SC> showplatform -p hostid

              MAC Address          HostID
              -----------------    --------
Domain A      08:00:20:d8:88:99    80d88899
Domain B      08:00:20:d8:88:9c    80d8889c
Domain C      08:00:20:d8:88:9b    80d8889b
Domain D      08:00:20:d8:88:9a    80d8889a
SSC0          08:00:20:d8:88:9d    80d8889d
SSC1          08:00:20:d8:88:9e    80d8889e

System Serial Number: xxxxxxx
Chassis HostID: xxxxxxxx
HostID/MAC address mapping mode: manual
```

The `HostID/MAC address mapping mode` setting is `manual`, which indicates that the HostID/MAC addresses for a domain pair have been swapped.

Note – If you are using a boot server, be sure to configure the boot server to recognize the swapped domain HostID/MAC addresses.

▼ To Restore the HostID/MAC Address Swapped Between Domains

Note – Use this procedure to restore swapped HostID/MAC addresses to their original domains. If you are downgrading from 5.16.0 (or greater) to an earlier firmware release, you must restore any swapped HostID/MAC addresses to their original domains before performing the downgrade. Refer to the `Install.info` file for complete downgrade instructions. However, if you have a midrange system that contains boards with UltraSPARC IV CPUs, you cannot downgrade the firmware to a version before 5.16.0 because those processors are not supported by firmware releases earlier than 5.16.0.

---

1. **From the platform shell on the main SC, type:**

```
schostname:SC> setupplatform -p hostid -m auto
```

2. **Enter `y` (yes) to restore the HostID/MAC addresses that were swapped between domains:**

```
HostID/MAC Address Swap
-----------------------
Restore automatic HostID/MAC address assignment? [no]: y
```

3. **To verify that the HostID/MAC addresses were restored to the original domains, type:**

```
schostname:SC> showplatform -p hostid
```

For example:

```
schostname:SC> showplatform -p hostid

               MAC Address          HostID
               -----------------    --------
Domain A       08:00:20:d8:88:99    80d88899
Domain B       08:00:20:d8:88:9a    80d8889a
Domain C       08:00:20:d8:88:9b    80d8889b
Domain D       08:00:20:d8:88:9c    80d8889c
SSC0           08:00:20:d8:88:9d    80d8889d
SSC1           08:00:20:d8:88:9e    80d8889e

System Serial Number: xxxxxxx
Chassis HostID: xxxxxxxx
HostID/MAC address mapping mode: automatic
```

The `HostID/MAC address mapping mode` setting is `automatic`, which indicates that the swapped HostID/MAC addresses have been restored to their original domains.

Note – If you are using a boot server, be sure to configure the boot server to recognize the restored HostID/MAC addresses.

Upgrading the Firmware

The `flashupdate` command updates the firmware in the system controller and the system boards (CPU/Memory boards and I/O assemblies). There is no firmware on the Repeater boards. This command is available in the platform shell only. The source flash image can be on a server or another board of the same type.

For a complete description of this command, including command syntax and examples, see the `flashupdate` command in the *Sun Fire Midrange System Controller Command Reference Manual*.

Note – Review the `README` and `Install.info` files before you upgrade the firmware.

In order to upgrade the firmware from a URL, the firmware must be accessible from an FTP or HTTP URL. Before performing the `flashupdate` procedure, read the `Install.info` file and the information in the "Description" section of the `flashupdate` command in the *Sun Fire Midrange System Controller Command Reference Manual*. The "Description" section covers:

- Steps to perform before you upgrade the firmware
- What to do if the images you installed are incompatible with the new images

Caution – When you update the firmware on the system controller, update only one system controller at a time, as described in the `Install.info` file. *Do not* update both system controllers at the same time.

Saving and Restoring Configurations

This section describes when to use the `dumpconfig` and `restoreconfig` commands.

Note – Be sure to save the system configuration whenever you upgrade the firmware. If you use the `dumpconfig` command to save a system configuration but later upgrade the firmware without saving the system configuration after the latest upgrade, the configuration files are associated with the previous firmware version. If you use the `restoreconfig` command to restore those configuration files, the `restoreconfig` operation will fail because the firmware version of the configuration file is not compatible with the upgraded firmware.

Using the `dumpconfig` Command

Use the `dumpconfig` command to save platform and domain settings after you:

- Complete the initial configuration of the platform and the domains.
- Modify the configuration, or change the hardware configuration

For an explanation of how to use this command, see "Saving the Current Configuration to a Server" on page 53. For complete command syntax and examples of this command, refer to the `dumpconfig` command in the *Sun Fire Midrange System Controller Command Reference Manual*.

Using the `restoreconfig` Command

Use the `restoreconfig` command to restore platform and domain settings.

For complete command syntax and examples of this command, refer to the `restoreconfig` command in the *Sun Fire Midrange System Controller Command Reference Manual*.

CHAPTER 6

Security Guidelines

This chapter provides important information about securing the system controller, explains security recommendations for the platform and the domains, discusses domain separation requirements and domain minimization, and provides references to Solaris operating environment security.

The topics in this chapter are organized in these sections:

- "Securing the System Controller" on page 81
- "Securing the System Platform" on page 84
- "Securing the System Domains" on page 93
- "Additional Security Considerations" on page 97

Securing the System Controller

Securing the system controller involves domain separation and hardening.

- Sun Fire systems are designed to enforce strict *separation* between domains, as well as limit communication between the domains and the SC.

  However, communication paths must exist between each domain and the SC so that the SC can provide

  - A virtual console for each domain
  - Access to the OpenBoot™ Prom (OBP)
  - A mechanism for services and daemons to communicate from the SC to the domains and from the domains to the SC

  These communication paths have been constructed to enforce the separation of the domains and the SC, and to ensure that information cannot be leaked between domains and the SC or from one domain to another through the SC.

- The SC uses special memory structures, called mailboxes, to communicate with domain-side OBP, POST, and the Solaris Operating Environment. By implementing intra-chassis communications with the mailbox protocol, Sun Fire midrange systems maintain strict separation between domains. Communication from domains to the SC is strictly limited.
- Communication between the SC and each domain occurs by reading and writing to these special memory segments located on the Input/Output (I/O) and CPU boards within the specified domain.
- The SC uses a private hardware path called the console bus to access these special memory segments in the Sun Fire midrange system chassis.
- Domains cannot access shared memory segments in other domains in the same chassis.
- Because Sun Fire midrange systems do not provide general-purpose connections (such as Ethernet) between the SC and domains, such protocols cannot be used to either compromise the SC or leak information through the SC to another domain.

- The practice of configuring a system to limit unauthorized access is called *hardening*.

This chapter provides recommendations for hardening the platform and domains of midrange systems within the structure of domain separation.

Guidelines for Securing the SC

FIGURE 6-1 illustrates domain separation. In this illustration, a domain user is a person who is using the Solaris operating environment and does not have access to the system controller. The domain administrator is responsible for:

- Configuring the domain
- Maintaining domain operations
- Overseeing the domain

The domain administrator has access to the domain console and domain shell for the domain the administrator is responsible for. Also note in FIGURE 6-1 that the platform administrator has access to the platform shell and the platform console. If the platform administrator knows the domain passwords, the platform administrator also has access to domain shells and consoles. You should always set the domain shell passwords for each domain.

The following are security practices to consider:

- Make sure that all passwords comply with security guidelines. For example, each domain and the platform should have a unique password.
- Change your passwords for the platform and each domain shell on a regular basis.
- Scrutinize log files on a regular basis for any irregularities.

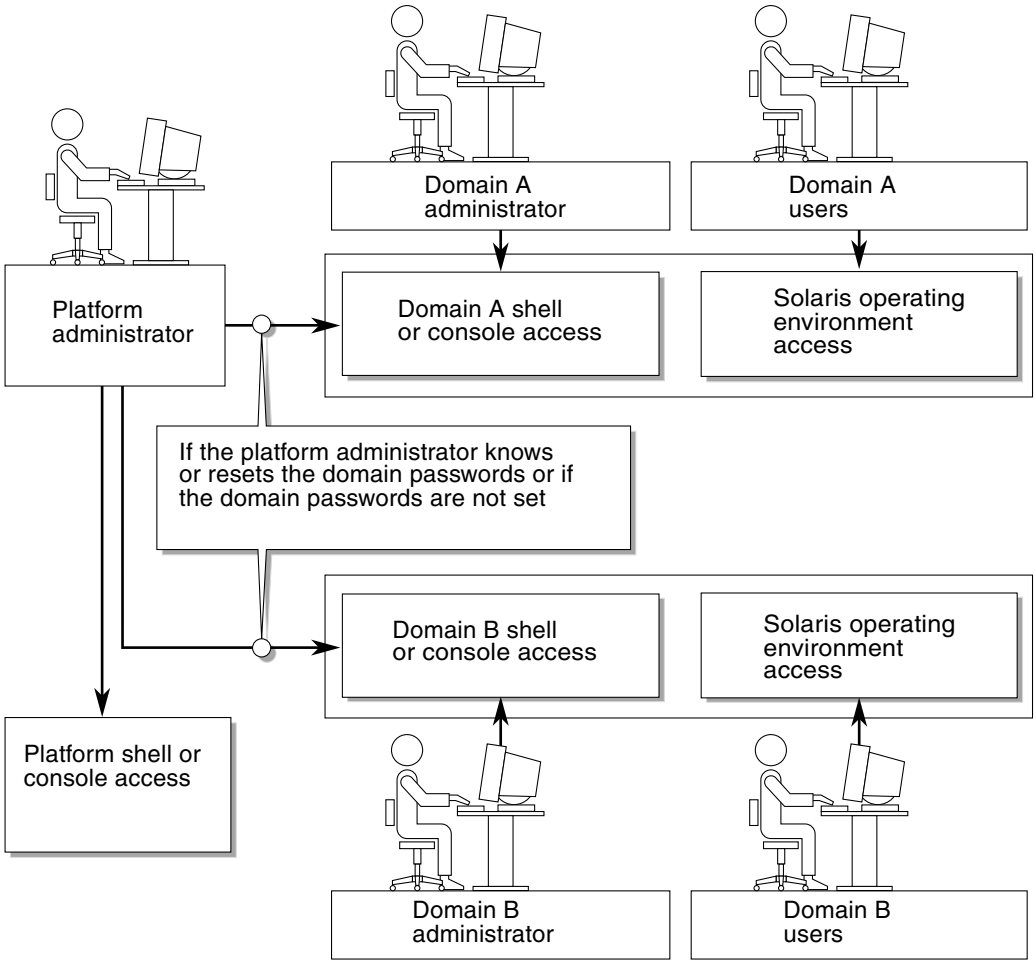

FIGURE 6-1 System With Domain Separation

There are several configuration steps that can contribute to hardening your system. These steps are guidelines for system configuration:

- Implement security modifications immediately after updating the Sun Fire RTOS and SC application firmware and before configuring or installing any Sun Fire domains.
- Disable the SC failover mechanism before hardening the SC. Re-enable failover after you harden and test the complete configuration.
- Aim, in general, to restrict access to the SC operating system, RTOS.
- Expect to reboot, depending upon the configuration changes.

For information about using the Sun Security Toolkit to create secure configurations for systems running the Solaris operating environment, refer to the following web site:

`http://www.sun.com/security/jass`

Securing the System Platform

This section describes the security features that you can implement at the platform level. Most of the platform administrator security settings are configured through the `setupplatform` command, which prompts you for your platform configuration. You can also run the `setupplatform` command in a mode that prompts you for specific subsets (*parts*) of the platform configuration, when you specify the `-p` option and the subset (part) required. The `setupplatform` command examples in this chapter use the `-p` option.

The platform security configuration checklist (see TABLE 6-1) identifies the `setupplatform` parameters and other tasks for securing the system platform. For detailed information on the `setupplatform` parameters involving system controller security, refer to the command description in the *Sun Fire Midrange System Controller Command Reference Manual*.

Note – As a precaution, after you complete the tasks identified in the platform security configuration checklist (TABLE 6-1) and also the domain security configuration checklist (TABLE 6-3), save your configuration with the `dumpconfig` command so that you can restore the platform and domain configurations.

TABLE 6-1 Platform Security Configuration Checklist

Setting or Task	Recommendation
Remote connection type	Select `ssh` as the connection type in the `setupplatform` command . **Note:** If you use a network-based terminal server, use SSH to access the terminal server, ensuring that all communications with the server are encrypted. See "Selecting a Remote Connection Type" on page 86.
Loghost configuration	Use different syslog facilities in the `setupplatform` command to distinguish between messages originating from the platform and from each domain. See "Configuring the Platform Loghost" on page 89.
SNMP	Use the default setting (SNMP disabled) in the `setupplatform` command, unless you need to use Sun Management Center software. **Note:** If you use Sun Management Center software, keep the entire network from the SC to the Sun Management Center server physically isolated from other networks. See "Using the SNMP Protocol Default Configuration" on page 90.
SNTP	If the SC is configured for failover, use the SNTP parameter in the `setupplatform` command to synchronize system clocks. See "Setting the SNTP Protocol Configuration" on page 90.
Set the platform password	Use a minimum password length of 16 characters (this can be a *pass-phrase).* Passwords should contain a mixture of uppercase, lowercase, numeric and punctuation characters. See "Defining the Platform Password" on page 91.
Set hardware access ACLs	Use the platform administrator account only when initially assigning hardware components to the appropriate domains. After hardware assignments are complete, log into each domain shell account (as appropriate) to manage the hardware assigned to that domain. See "Defining Hardware Access Control Lists (ACLs)" on page 91.
Limit access to serial ports	Limit physical access to serial ports.
Reboot (if necessary)	See "Rebooting the SC to Implement Settings" on page 92.

Selecting a Remote Connection Type

The SSH and TELNET services on the SC are disabled by default. You can define the session idle timeout period that applies to all network connections to the SC. The default is no session idle timeout period. The SSH and TELNET configurations do not affect the operation of the platform console.

Refer to the *setupplatform* command description in the *Sun Fire Midrange System Controller Command Reference Manual* for details on how to configure timeouts.

Enabling SSH

If the SC is on a general purpose network, you can ensure secure remote access to the SC by using SSH rather than TELNET. SSH encrypts data flowing between host and client. It provides authentication mechanisms that identify both hosts and users, enabling secure connections between known systems. TELNET is fundamentally insecure because the TELNET protocol transmits information (including passwords) unencrypted.

Note – SSH does not help with FTP, HTTP, SYSLOG, or SNMPv1 protocols. These protocols are insecure and should be used cautiously on general purpose networks.

The SC provides limited SSH functionality, supporting only SSH version 2 (SSHv2) client requests. TABLE 6-2 identifies the various SSH server attributes and describes how the attributes are handled in this subset. These attribute settings are not configurable.

TABLE 6-2 SSH Server Attributes

Attribute	Value	Comment
Protocol	2	SSH v2 support only
Port	22	Listening port
ListenAddress	0.0.0.0	Support multiple IP addresses
AllowTcpForwarding	no	Port forwarding not supported
RSAAuthentication	no	Public key authentication disabled
PubkeyAuthentication	no	Public key authentication disabled

TABLE 6-2 SSH Server Attributes *(Continued)*

Attribute	Value	Comment
PermitEmptyPasswords	yes	Password authentication controlled by the SC
MACs	hmac-sha1,hmac-md5	Same SSH server implementation as the Solaris 9 Operating Environment
Ciphers	aes128-cbc,blowfish-cbc,3des-cbc	Same SSH server implementation as the Solaris 9 Operating Environment

▼ To Enable SSH

If you use SSH as your remote access type, you can make as many as five simultaneous SSH connections to the SC.

1. **To enable SSH, type:**

```
schostname:SC> setupplatform -p network
```

You are prompted to enter the network configuration and connection parameters. For example:

```
schostname:SC> setupplatform -p network

Network Configuration
---------------------
Is the system controller on a network? [yes]:
Use DHCP or static network settings? [static]:
Hostname [hostname]:
IP Address [xx.x.xx.xx]:
Netmask [xxx.xxx.xxx.x]:
Gateway [xx.x.xx.x]:
DNS Domain [xxxx.xxx.xxx]:
Primary DNS Server [xxx.xxx.xxx.xx]:
Secondary DNS Server [xxx.xxx.xx.x]:

To enable remote access to the system controller, select "ssh" or
"telnet."

Connection type (ssh, telnet, none) [none]: ssh

Rebooting the SC is required for changes in the above network
settings to take effect.

Idle connection timeout (in minutes; 0 means no timeout) [0]:
```

For detailed information on the `setupplatform` parameters, refer to the command description in the *Sun Fire Midrange System Controller Command Reference Manual*.

Features Not Supported by SSH

The SSH server on Sun Fire midrange systems does not support the following features:

- Remote command-line execution
- `scp` command (secure copy program)
- `sftp` command (secure file transfer program)
- Port forwarding
- Key-based user authentication
- SSHv1 clients

If you try to use any of the above features, an error message is generated. For example, running the command

```
# ssh SCHOST showboards
```

generates the following messages:

- On the SSH client:

```
Connection to SCHOST closed by remote host.
```

- On the SC console:

```
[0x89d1e0] sshdSessionServerCreate: no server registered
           for showboards
[0x89d1e0] sshd: Failed to create sshdSession
```

Changing SSH Host Keys

It is good security practice for well-managed machines to get new host keys periodically. If you suspect that the host key might be compromised, you can use the `ssh-keygen` command to regenerate system host keys.

Host keys, once generated, can only be replaced and not deleted without resorting to the `setdefaults` command. For newly generated host keys to be activated, the SSH server must be restarted either by running the `restartssh` command or through a reboot. For further information on the `ssh-keygen` and `restartssh` commands (with examples), see the *Sun Fire Midrange System Controller Command Reference Manual*.

Note – You can also use the `ssh-keygen` command to display the host key fingerprint on the SC.

Configuring the Platform Loghost

You can monitor the SC by configuring the platform loghost to which all `SYSLOG` messages are forwarded. Starting with the 5.16.0 release, the firmware supports an enhanced-memory SC that offers some persistent storage for certain SC-generated message logs. However, it is strongly recommended that the SYSLOG messages be

forwarded to a central location (off the platform) for storage, reconciliation, and review (for unusual activity) of all log messages. Due to the importance of the messages stored on the loghost, secure the loghost carefully and backup loghost message data regularly.

If DNS is not being used, define the loghost through its IP addresses.

In addition to specifying the name/IP address of the loghost, you can specify the facility level included in the `SYSLOG` messages. The `SYSLOG` protocol provides eight user-defined facility levels: `local0` through `local7`, in addition to the 18 system-defined facilities. However, only the user-defined facility levels can be used while customizing the `SYSLOG` behavior of the SCs.

Because all SC-generated `SYSLOG` messages come from the same IP address—that of the SC, you can use the different `SYSLOG` facilities to distinguish between messages originating from the platform and each domain. For example, the platform could use the `SYSLOG` facility `local0`, while domain `a` could use the `SYSLOG` facility `local1`, and so on.

Using the SNMP Protocol Default Configuration

Simple Network Management Protocol (SNMP) is commonly used to monitor and manage networked devices and systems. By default, SNMP is disabled.

Note – The use of Sun Management Center software requires SNMP. However, since the SC does not support a secure version of the SNMP protocol, do not enable SNMP unless you must use Sun Management Center software.

Setting the SNTP Protocol Configuration

Simple Network Time Protocol (SNTP) is used to synchronize computer clocks. The default SC configuration for SNTP is `off`. In systems with redundant SCs, it is recommended that you configure it to `on`, so that time on the main SC and the spare SC can be synchronized.

If configured for SNTP, the SC sends a request to a designated SNTP or NTP unicast server and expects a reply from that server. The SC neither accepts remote administration commands via SNTP, nor does it accept any broadcast traffic.

For more information on SNTP, see "Setting the Platform Date and Time" on page 48.

Defining the Platform Password

The only restrictions on SC platform and domain passwords are the character set supported by ASCII and the terminal emulator in use. The SC uses the MD5 algorithm to generate a hash of the password entered. Correspondingly, all characters entered are significant.

A minimum password length of 16 characters promotes the use of pass-phrases instead of passwords. Passwords should be composed of a mixture of lowercase, uppercase, numeric, and punctuation characters. For information on how to set the platform password, see "To Set a Password for the Platform" on page 49.

Defining Hardware Access Control Lists (ACLs)

If your Sun Fire system has multiple domains and their resources are restricted in some way, you can benefit from implementing ACLs.

By default, all hardware present in the system is accessible to all domains. Use the platform administrator shell to assign the different CPU and I/O boards into the appropriate domains.

Note – ACLs only limit hardware assignments made while using the domain shells. Hardware assignments made while using the platform shell supersede all ACL definitions.

The capability of the platform shell to assign and reassign hardware components is not restricted by ACLs. You can use the platform administrator account initially only to assign hardware components to the appropriate domain. After you have assigned hardware components to each domain, the platform administrator should log into the appropriate domain shell account to manage the hardware assigned to that domain.

Hardware already assigned to a running domain is not removed if its ACL is modified to restrict it from being used in that domain. Therefore, it is important to assign hardware into domains as soon as it is available in the chassis and before domain administrators assign it.

▼ To Define Hardware Access Control Lists

This procedure involves the `showboards`, `showplatform`, `addboard`, and `setupplatform` commands. For details on these commands, refer to their descriptions in the *Sun Fire Midrange System Controller Command Reference Manual*.

Note – Although a platform administrator can assign hardware into specific domains, it is up to domain administrators to use those resources appropriately and determine whether those resources are configured into a running domain.

---

1. **Determine which boards are present in the system by running the** `showboards` **command from the platform shell on the main SC.**
2. **View the current set of ACLs defined on the system by running the** `showplatform -p acl` **command from the platform shell on the main SC.**
3. **For each board to be assigned to a specific domain, run the** `addboard -d` *domainID systemboard_name [...]* **command from the platform shell on the main SC.**

   For example:

   ```
   schostname:SC> addboard -d a SB0 IB6
   schostname:SC> addboard -d b SB2 IB8
   schostname:SC> addboard -d a SB0 IB6
   ```

4. **Review the board assignments by running the** `showboards` **command from the platform shell on the main SC.**

   The output should identify the boards assigned to the domains that you specified in Step 3.

5. **Verify that the domains contain the assigned boards by running the** `setupplatform -p` **and** `showplatform -p acl` **commands from the platform shell on the main SC.**

   The output from these commands shows the ACLs defined for each domain in the system.

Rebooting the SC to Implement Settings

The SC needs to be rebooted if a console message similar to the following is displayed:

```
Rebooting the SC is required for changes in network settings to
take effect.
```

- **Type** `reboot -y` **to reboot the SC**

  The SC can be rebooted while domains are up and running.

After rebooting the SC, use the `showplatform -p` command to validate that all the network modifications were implemented.

Securing the System Domains

This section describes the domain-specific security precautions that you can implement after making all the platform shell security configuration changes. The domain-specific security tasks include the following:

- Setting domain passwords
- Setting the Loghost and facility for each domain
- Setting the SNMP information

These modifications must be performed for each domain.

TABLE 6-3 identifies the `setupdomain` parameter settings and other tasks for securing system domains.

TABLE 6-3 Domain Security Configuration Checklist

Setting or Task	Recommendation
Set the domain password	Use unique passwords for each domain. Change passwords frequently. See "Defining Passwords for the Domains" on page 94.
Loghost configuration	In the `setupdomain` command, provide separate Loghost definitions for each domain and platform shell to use separate SYSLOG servers for collecting information. See "Defining Domain Loghosts" on page 95.
SNMP configuration	In the `setupdomain` command, specify different Public and Private Community Strings for each domain. See "Configuring Domain SNMP Information" on page 96.
Set the virtual keyswitch	The recommended `setkeyswitch` setting for a running domain is `secure`. See "Configuring the Virtual Keyswitch for Each Domain" on page 97.

Most of the recommended changes are performed using the platform shell. Only a few domain-specific changes require using domain shells. The examples in the following sections show the changes for domain `a`.

Defining Passwords for the Domains

Note – Make sure that you know who has access to the system controller. Anyone who has such access can control the system.

When you set up your system for the first time:

- Make sure that you set the platform password and a different domain password for each domain (even if the domain is not used) to ensure isolation between domains.
- Change the platform and domain passwords frequently.

A domain shell is always present for a domain, whether any hardware is assigned to that domain. To prevent potential unauthorized reallocation of hardware to an unused domain, do the following:

- Define passwords for all domain shells.
- Define unique passwords for each domain, the platform shell, and the Solaris operating environment images running on the domains.
- Use a minimum password length of 16 mixed-case alphanumeric characters.

You can set a domain password from either the shell of the domain or the platform shell with the `password` command.

For example, the following command sets the password of domain `a` from the platform shell:

```
schostname:SC> password -d a

Enter new password: xxxxxxxxxxxxxxxxx
Enter new password again: xxxxxxxxxxxxxxxxx
```

Note – All domain shells should have passwords set—regardless of whether they are used and have hardware assigned.

The same command, with the appropriate domain name, sets the passwords for domains `b` through `d`.

If a password was defined for either a platform or domain shell, the password command requires its entry before allowing a new password to be entered. The only exception is that the platform administrator can change a domain password without knowing the old password as follows:

```
schostname:SC> password -d d
Enter new password:
Enter new password again:
```

Note – You can reset domain passwords by doing a restore of a previously saved SC configuration, using the `restoreconfig` command. You can also reset domain passwords using the `setdefaults -d` *domainID* command (this resets all other configuration parameters to their default values).

Defining Domain Loghosts

To employ the Loghost facility, you must define a loghost for each of the domains individually. The configuration is similar to that described in the "Configuring the Platform Loghost" on page 89. By having separate definitions of loghost for each domain and platform shell, you can use separate `SYSLOG` servers to collect information. In the following example, only one system collects and parses the `SYSLOG` data. The facility option helps differentiate `SYSLOG` messages coming from the four different domains and platform shells.

Note – Unless you configure the Loghost facility properly, you will not have all of the data required for effective troubleshooting.

Before using the `setupdomain` command to define the loghost for each domain, log into the appropriate domain shell.

For example:

```
schostname:A> setupdomain -p loghost

Loghosts
--------
Loghost [ ]: 192.168.100.10
Log Facility for Domain A: local1
```

In our example, the Loghost definition defines a facility of `local1`. Previously, the platform shell used `local0`. This example is specific to `domain-a`. Correspondingly, `domain-b` uses `local2`, `domain-c` uses `local3`, and `domain-d` uses `local4`.

Note – The domain shell definition of the Loghost does not affect where the `SYSLOG` messages generated by the Solaris operating environment for that domain are forwarded. Define the Solaris `SYSLOG` server in the `/etc/syslog.conf` file of the Solaris operating environment.

Use the `showdomain` command to display the Loghost and Log Facility for the domain:

```
schostname:A> showdomain -p loghost

Loghost for Domain A: 192.168.100.10
Log Facility for Domain A: local1
```

Configuring Domain SNMP Information

Each domain has unique SNMP configurations that must be configured separately. Some of the domain SNMP information can be the same (for example, domain contact and trap host); however, the public and private community strings must be different for the platform and for each domain. The platform and domain community strings also must be different from each other. Different public and private community strings are required so that each domain can be accessed separately. The two community strings provide the mechanism by which individual domains are accessed.

Note – For the purpose of security, you should select non-default values for SNMP community strings.

If you use SNMP management or monitoring, then you must select non-default SNMP community strings.

Configuring the Virtual Keyswitch for Each Domain

The Sun Fire midrange systems do not have a physical keyswitch. You set the virtual keyswitch in each domain shell with the `setkeyswitch` command. To secure a running domain, set the domain keyswitch to the secure setting. With the keyswitch set to secure, the following restrictions occur:

- Disables the ability to perform flashupdate operations on CPU/Memory boards or I/O assemblies. Performing flashupdate operations on these boards should be done only by an administrator who has platform shell access on the system controller.
- Ignores `break` and `reset` commands from the system controller. This functionality ensures that accidentally typing a `break` or `reset` command will not halt a running domain.

Use the `setkeyswitch` command to set the virtual keyswitch for a domain:

```
schostname:A> setkeyswitch secure
```

Additional Security Considerations

This section discusses

- Special Key Sequences Allow RTOS Shell Access
- Domain Minimization
- Solaris Operating Environment Security

Special Key Sequences Allow RTOS Shell Access

Special key sequences can be issued to the SC, over its serial connection, while it is booting. These key sequences have special capabilities if entered at the serial port within the first 30 seconds after an SC reboot.

The special capabilities of these key sequences are automatically disabled 30 seconds after the Sun copyright message is displayed. Once the capability is disabled, the key sequences operate as normal control keys.

Because of the risk that the security of the SC could be compromised by unauthorized access to the RTOS shell, you should control access to the serial ports of the SC.

Domain Minimization

One way to contribute to the security of a Sun Fire midrange system is to tailor the installation of software to an essential minimum. By limiting the number of software components installed on each domain (called *domain minimization*), you can reduce the risks of security holes that can be exploited by potential intruders.

For a detailed discussion of minimization, with examples, see *Minimizing Domains for Sun Fire V1280, 6800, 12K, and 15K Systems* (two-part article) available online at:

`http://www.sun.com/security/blueprints`

Solaris Operating Environment Security

For information on securing the Solaris operating environment, refer to the following books and articles:

- *Solaris Security Best Practices* – available online at

  `http://www.sun.com/security/blueprints`
- *Solaris Security Toolkit* – available online at

  `http://www.sun.com/security/jass`
- *Solaris 8 System Administration Supplement* or the *System Administration Guide: Security Services* in the Solaris 9 System Administrator Collection

CHAPTER 7

Automatic Diagnosis and Recovery

This chapter describes the error diagnosis and domain recovery capabilities included with the firmware for Sun Fire midrange systems. This chapter explains the following:

- "Automatic Diagnosis and Recovery Overview" on page 99
- "Automatic Recovery of Hung Domains" on page 102
- "Domain Diagnosis Events" on page 103
- "Domain Recovery Controls" on page 104
- "Obtaining Auto-Diagnosis and Domain Recovery Information" on page 105

Automatic Diagnosis and Recovery Overview

The diagnosis and recovery features are enabled by default on Sun Fire midrange systems. This section provides an overview of how these features work.

Depending on the type of hardware errors that occur and the diagnostic controls that are set, the system controller performs certain diagnosis and domain recovery steps, as FIGURE 7-1 shows. The firmware includes an *auto-diagnosis* (AD) engine, which detects and diagnoses hardware errors that affect the availability of a platform and its domains.

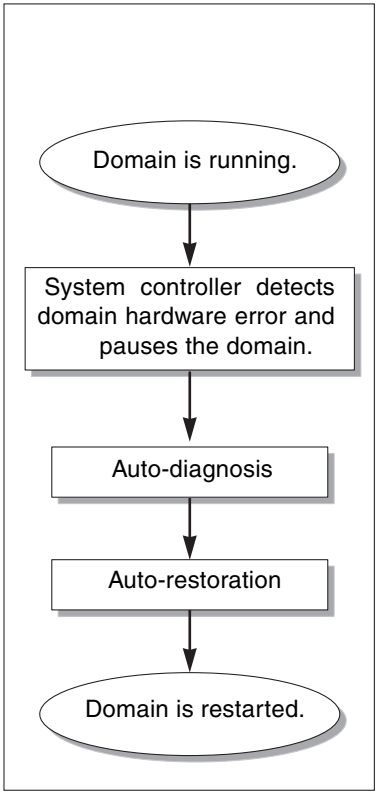

FIGURE 7-1 Auto Diagnosis and Domain Recovery Process

The following summary describes the process shown in FIGURE 7-1:

1. **System Controller detects domain hardware error and pauses the domain.**
2. **Auto-diagnosis.** The AD engine analyzes the hardware error and determines which field-replaceable units (FRUs) are associated with the hardware error.

   The AD engine provides one of the following diagnosis results, depending on the hardware error and the components involved:

   - Identifies a single FRU that is responsible for the error.
   - Identifies multiple FRUs that are responsible for the error. Be aware that not all components listed may be faulty. The hardware error could be related to a smaller subset of the components identified.
   - Indicates that the FRUs responsible for the error cannot be determined. This condition is considered to be "unresolved" and requires further analysis by your service provider.

The AD engine records the diagnosis information for the affected components and maintains this information as part of the *component health status* (CHS).

The AD reports diagnosis information through the following:

- Platform and domain console event messages or the platform or domain loghost output, provided that the `syslog` loghost for the platform and domains has been configured (see "The `syslog` Loghost" on page 104 for details).

  CODE EXAMPLE 7-1 shows an auto-diagnosis event message that appears on the platform console. In this example, a single FRU is responsible for the hardware error. See "Reviewing Auto-Diagnosis Event Messages" on page 105 for details on the AD message contents.

CODE EXAMPLE 7-1 Example of Auto-Diagnosis Event Message Displayed on the Platform Console

```
Jan 23 20:47:11 schostname Platform.SC: ErrorMonitor: Domain A has a SYSTEM ERROR
.
.
.
[AD] Event: SF3800.ASIC.SDC.PAR_SGL_ERR.60111010
      CSN: 124H58EE  DomainID: A ADInfo: 1.SCAPP.15.0
      Time: Thu Jan 23 20:47:11 PST 2003
      FRU-List-Count: 1; FRU-PN: 5014362; FRU-SN: 011600; FRU-LOC: /N0/SB0
      Recommended-Action: Service action required

Jan 23 20:47:16 schostname Platform.SC: A fatal condition is detected on Domain
A. Initiating automatic restoration for this domain.
```

Note – Contact your service provider when you see these auto-diagnosis messages. Your service provider will review the auto-diagnosis information and initiate the appropriate service action.

- Output from the `showlogs`, `showboards`, `showcomponent`, and `showerrorbuffer` commands (see "Obtaining Auto-Diagnosis and Domain Recovery Information" on page 105 for details on the diagnosis-related information displayed by these commands).

  The output from these commands supplements the diagnosis information presented in the platform and domain event messages and can be used for additional troubleshooting purposes.

3. **Auto-restoration.** During the auto-restoration process, POST reviews the component health status of FRUs that were updated by the AD engine. POST uses this information and tries to isolate the fault by deconfiguring (disabling) any

FRUs from the domain that have been determined to cause the hardware error. Even if POST cannot isolate the fault, the system controller then automatically reboots the domain as part of domain restoration.

Note – To take advantage of the automatic recovery feature, make sure that the Openboot PROM variable `hang-policy` is set to `reset`.

Automatic Recovery of Hung Domains

The system controller automatically monitors domains for hangs when either of the following occurs:

- A domain heartbeat stops within a designated timeout period.

  The default timeout value is three minutes, but you can override this value by setting the `watchdog_timeout_seconds` parameter in the domain `/etc/systems` file. If you set the value to less than three minutes, the system controller uses three minutes (the default value) as the timeout period. For details on this system parameter, refer to the `system`(4) man page of your Solaris operating environment release.

- The domain does not respond to interrupts.

When the `hang policy` parameter of the `setupdomain` command is set to `reset`, the system controller automatically performs an externally initiated reset (XIR) and reboots the hung domain. If the `OBP.error-reset-recovery` parameter of the `setupdomain` command is set to `sync`, a core file is also generated after an XIR and can be used to troubleshoot the domain hang. See "Domain Parameters" on page 104 section for details.

CODE EXAMPLE 7-2 shows the domain console message displayed when the domain heartbeat stops.

CODE EXAMPLE 7-2 Example of Domain Message Output for Automatic Domain Recovery After the Domain Heartbeat Stops

```
Jan 22 14:59:23 schostname Domain-A.SC: Domain watchdog timer expired.
Jan 22 14:59:23 schostname Domain-A.SC: Using default hang-policy (RESET).
Jan 22 14:59:23 schostname Domain-A.SC: Resetting (XIR) domain.
```

CODE EXAMPLE 7-3 shows the domain console message displayed when the domain does not respond to interrupts.

CODE EXAMPLE 7-3 Example of Domain Console Output for Automatic Domain Recovery After the Domain Does Not Respond to Interrupts

```
Jan 22 14:59:23 schostname Domain-A.SC: Domain is not responding to interrupts.
Jan 22 14:59:23 schostname Domain-A.SC: Using default hang-policy (RESET).
Jan 22 14:59:23 schostname Domain-A.SC: Resetting (XIR) domain.
```

Domain Diagnosis Events

Starting with the 5.15.3 release, certain non-fatal domain hardware errors are identified by the Solaris operating environment and reported to the system controller. The system controller does the following:

- Records and maintains this information for the affected domain resources as part of the component health status
- Reports this information through domain diagnosis [DOM] event messages displayed on the domain console or domain loghost, provided that domain loghosts have been configured

The next time that POST is run, POST reviews the health status of affected resources and if possible, deconfigures the appropriate resources from the system.

CODE EXAMPLE 7-4 shows a domain diagnosis event message for a non-fatal domain error. When you see such event messages, contact your service provider so that the appropriate service action can be initiated. The event message information provided is described in "Reviewing Auto-Diagnosis Event Messages" on page 105.

CODE EXAMPLE 7-4 Domain Diagnosis Event Message – Non-fatal Domain Hardware Error

```
[DOM] Event: SF6800.L2SRAM.SERD.2.f.1b.10040000000091.f4470000
      CSN: 044M347B DomainID: A ADInfo: 1.SF-SOLARIS-DE.build:05/29/03
      Time: Mon Jun 02 23:34:59 PDT 2003
      FRU-List-Count: 1; FRU-PN: 3704125; FRU-SN: 090K01; FRU-LOC: /N0/SB3/P3/E0
      Recommended-Action: Service action required
```

You can obtain further information about components deconfigured by POST by using the `showboards` and `showcomponent` commands, as described in "Reviewing Component Status" on page 108.

Domain Recovery Controls

This section explains the various controls and domain parameters that affect the domain restoration features.

The `syslog` Loghost

Sun strongly recommends that you define platform and domain loghosts to which all system log (`syslog`) messages are forwarded and stored. Platform and domain messages, including the auto-diagnosis and domain-recovery event messages, cannot be stored locally. By specifying a loghost for platform and domain log messages, you can use the loghost to monitor and review critical events and messages as needed. However, you must set up a loghost server if you want to assign platform and domain loghosts.

You assign the loghosts through the `Loghost` and the `Log Facility` parameters in the `setupplatform` and `setupdomain` commands. The facility level identifies where the log messages originate, either the platform or a domain. For details on these commands, refer to their command descriptions in the *Sun Fire Midrange System Controller Command Reference Manual.*

Domain Parameters

TABLE 7-1 describes the domain parameter settings in the `setupdomain` command that control the diagnostic and domain recovery process. The default values for the diagnostic and domain recovery parameters are the recommended settings.

Note – If you do not use the default settings, the domain restoration features will not function as described in "Automatic Diagnosis and Recovery Overview" on page 99.

TABLE 7-1 Diagnostic and Domain Recovery Parameters in the `setupdomain` Command

`setupdomain` Parameter	Default Value	Description
`reboot-on-error`	`true`	Automatically reboots the domain when a hardware error is detected. Also boots the Solaris operating environment when the `OBP.auto-boot` parameter is set to `true`.
`hang-policy`	`reset`	Automatically resets a hung domain through an externally initiated reset (XIR).
`max-panic-diag-limit`	(The same list of values as `diag-level`. The default value is `mem2`)	Defines the maximum level of POST that runs automatically during repeated domain panics. POST level is escalated upon repeated panics until it runs the level specified in `max-panic-diag-limit`. If the domain panics again, it is placed in standby..
`OBP.auto-boot`	`true`	Boots the Solaris operating environment after POST runs.
`OBP.error-reset-recovery`	`sync`	Automatically reboots the domain after an XIR occurs and generates a core file that can be used to troubleshoot the domain hang. However, be aware that sufficient disk space must be allocated in the domain swap area to hold the core file.

For a complete description of all the domain parameters and their values, refer to the `setupdomain` command description in the *Sun Fire Midrange System Controller Command Reference Manual.*

Obtaining Auto-Diagnosis and Domain Recovery Information

This section describes various ways to monitor hardware errors and obtain additional information about components associated with hardware errors.

Reviewing Auto-Diagnosis Event Messages

Auto-diagnosis `[AD]` and domain `[DOM]` event messages are displayed on the platform and domain console and also in the following:

- The platform or domain loghost, provided that you have defined the `syslog` host for the platform and domains.

Each line of the loghost output contains a timestamp, a `syslog` ID number, and the facility level that identifies the platform or a domain where the log message originated.

- The `showlogs` command output, which displays the event messages logged on the platform or domain console.

  In systems with SC V2s, certain log messages are maintained in persistent storage. You can selectively view certain types of persistent log messages according to message type, such as fault event messages, by using the `showlogs -p -f` *filter* command. For details, refer to the `showlogs` command description in the *Sun Fire Midrange System Controller Command Reference Manual.*

The diagnostic information logged on the platform and domain are similar, but the domain log provides additional information on the domain hardware error. The `[AD]` or `[DOM]` event messages (see CODE EXAMPLE 7-1, CODE EXAMPLE 7-4, CODE EXAMPLE 7-5, and CODE EXAMPLE 7-6) include the following information:

- `[AD]` or `[DOM]` – Beginning of the message. `AD` indicates that the ScApp or POST automatic diagnosis engine generated the event message. `DOM` indicates that the Solaris operating environment on the affected domain generated the automatic diagnosis event message.
- `Event` – An alphanumeric text string that identifies the platform and event-specific information used by your service provider.
- `CSN` – Chassis serial number, which identifies your Sun Fire midrange system.
- `DomainID` – The domain affected by the hardware error.
- `ADInfo` – The version of the auto-diagnosis message, the name of the diagnosis engine (SCAPP or SF-SOLARIS_DE), and the auto-diagnosis engine version. For domain diagnosis events, the diagnosis engine is the Solaris operating environment (SF-SOLARIS-DE) and the version of the diagnosis engine is the version of the Solaris operating environment in use.
- `Time` – The day of the week, month, date, time (hours, minutes, and seconds), time zone, and year of the auto-diagnosis.
- `FRU-List-Count` – The number of components (FRUs) involved with the error and the following FRU data:
  - If a single component is implicated, the FRU part number, serial number, and location are displayed, as CODE EXAMPLE 7-1 shows.
  - If multiple components are implicated, the FRU part number, serial number, and location for each component involved is reported, as CODE EXAMPLE 7-5 shows.

    In some cases, be aware that not all the FRUs listed are necessarily faulty. The fault may reside in a subset of the components identified.
  - If the SCAPP diagnosis engine cannot implicate specific components, the term `UNRESOLVED` is displayed, as CODE EXAMPLE 7-6 shows.

- `Recommended-Action: Service action required` – Instructs the platform or domain administrator to contact their service provider for further service action. Also indicates the end of the auto-diagnosis message.

CODE EXAMPLE 7-5 Example of Domain Console Auto-Diagnostic Message Involving Multiple FRUs

```
Jan. 23 21:07:51 schostname Domain-A.SC: ErrorMonitor: Domain A has a SYSTEM ERROR
.
.
.
[AD] Event: SF3800.ASIC.SDC.PAR_L2_ERR_TT.60113022
     CSN: 124H58EE  DomainID: A ADInfo: 1.SCAPP.15.0
     Time: Thu Jan 23 21:07:51 PST 2003
     FRU-List-Count: 2; FRU-PN: 5015876; FRU-SN: 000429; FRU-LOC: RP0
                        FRU-PN: 5014362; FRU-SN: 011570; FRU-LOC: /N0/SB2
     Recommended-Action: Service action required
Jan 23 21:08:01 schostname Domain-A.SC: A fatal condition is detected on Domain
A. Initiating automatic restoration for this domain.
```

CODE EXAMPLE 7-6 Example of Domain Console Auto-Diagnostic Message Involving an Unresolved Diagnosis

```
Jan 23 21:47:28 schostname Domain-A.SC: ErrorMonitor: Domain A has a SYSTEM ERROR
.
.
.
[AD] Event: SF3800
     CSN: 124H58EE  DomainID: A ADInfo: 1.SCAPP.15.0
     Time: Thu Jan 23 21:47:28 PST 2003
     FRU-List-Count: 0; FRU-PN: ; FRU-SN: ; FRU-LOC: UNRESOLVED
     Recommended-Action: Service action required

Jan 23 21:47:28 schostname Domain-A.SC: A fatal condition is detected on Domain
A. Initiating automatic restoration for this domain.
```

Reviewing Component Status

You can obtain additional information about components that have been deconfigured as part of the auto-diagnosis process or disabled for other reasons by reviewing the following items:

- The `showboards` command output after an auto-diagnosis has occurred

CODE EXAMPLE 7-7 shows the location assignments and the status for all components in the system. The diagnostic-related information is provided in the `Status` column for a component. Components that have a `Failed` or `Disabled` status are deconfigured from the system. The `Failed` status indicates that the board failed testing and is not usable. `Disabled` indicates that the board has been deconfigured from the system, because it was disabled using the `setls` command or because it failed POST. `Degraded` status indicates that certain components on the boards have failed or are disabled, but there are still usable parts on the board. Components with degraded status are configured into the system.

You can obtain additional information about `Failed`, `Disabled`, or `Degraded` components by reviewing the output from the `showcomponent` command.

CODE EXAMPLE 7-7 `showboards` Command Output – `Disabled` and `Degraded` Components

```
schostname: SC> showboards

Slot      Pwr Component Type                 State      Status     Domain
----      --- --------------                 -----      ------     ------
SSC0      On  System Controller              Main       Passed     -
SSC1      -   Empty Slot                     -          -          -
ID0       On  Sun Fire 4800 Centerplane      -          OK         -
PS0       -   Empty Slot                     -          -          -
PS1       On  A185 Power Supply              -          OK         -
PS2       On  A185 Power Supply              -          OK         -
FT0       On  Fan Tray                       High Speed OK         -
FT1       On  Fan Tray                       High Speed OK         -
FT2       On  Fan Tray                       High Speed OK         -
RP0       On  Repeater Board                 -          OK         -
/N0/SB0   On  CPU Board V3                   Assigned   Disabled   A
SB2       -   Empty Slot                     Assigned   -          A
/N0/SB4   On  CPU Board V3                   Active     Degraded   A
/N0/IB6   On  PCI I/O Board                  Active     Passed     A
IB8       Off PCI I/O Board                  Available  Not tested Isolated
```

- The `showcomponent` command output after an auto-diagnosis has occurred

  The `Status` column in CODE EXAMPLE 7-8 shows the status for components. The status is either `enabled` or `disabled`. The disabled components are deconfigured from the system. The POST status `chs` (abbreviation for component health status) flags the component for further analysis by your service provider.

Note – Disabled components that have a POST status of `chs` cannot be enabled by using the `setls` command. Contact your service provider for assistance. In some cases, subcomponents belonging to a "parent" component associated with a hardware error will also reflect a disabled status, as will the parent. You cannot re-enable the subcomponents of a parent component associated with a hardware error. Review the auto-diagnosis event messages to determine which parent component is associated with the error.

CODE EXAMPLE 7-8 `showcomponent` Command Output – Disabled Components

```
schostname: SC> showcomponent

Component          Status    Pending POST   Description
---------          ------    ------- ----   -----------
/N0/SB0/P0         disabled  -       chs    UltraSPARC-IV, 1050MHz, 16M ECache
/N0/SB0/P1         disabled  -       chs    UltraSPARC-IV, 1050MHz, 16M ECache
/N0/SB0/P2         disabled  -       chs    UltraSPARC-IV, 1050MHz, 16M ECache
/N0/SB0/P3         disabled  -       chs    UltraSPARC-IV, 1050MHz, 16M ECache
/N0/SB0/P0/B0/L0   disabled  -       chs    empty
/N0/SB0/P0/B0/L2   disabled  -       chs    empty
/N0/SB0/P0/B1/L1   disabled  -       chs    2048M DRAM
/N0/SB0/P0/B1/L3   disabled  -       chs    2048M DRAM
.
.
.
/N0/SB0/P3/B0/L0    disabled -       chs    empty
/N0/SB0/P3/B0/L2    disabled -       chs    empty
/N0/SB0/P3/B1/L1    disabled -       chs    2048M DRAM
/N0/SB0/P3/B1/L3    disabled -       chs    2048M DRAM
/N0/SB4/P0          enabled  -       pass   UltraSPARC-IV, 1050MHz, 16M ECache
/N0/SB4/P1          enabled  -       pass   UltraSPARC-IV, 1050MHz, 16M ECache
/N0/SB4/P2          enabled  -       pass   UltraSPARC-IV, 1050MHz, 16M ECache
/N0/SB4/P3          enabled  -       pass   UltraSPARC-IV, 1050MHz, 16M ECache
.
.
.
```

Reviewing Additional Error Information

For systems configured with SC V2s, the `showerrorbuffer -p` command displays the system error contents maintained in persistent storage.

However, for systems that do not have SC V2s, the `showerrorbuffer` command displays the contents of the system error buffer and displays error messages that otherwise might be lost when your domains are rebooted as part of the domain recovery process.

In either case, the information displayed can be used by your service provider for troubleshooting purposes.

CODE EXAMPLE 7-9 shows the output displayed for a domain hardware error, maintained in the system error buffer.

CODE EXAMPLE 7-9 `showerrorbuffer` Command Output – Hardware Error

```
schostname: SC> showerrorbuffer

ErrorData[0]
  Date: Tue Jan 21 14:30:20 PST 2003
  Device: /SSC0/sbbc0/systemepld
  Register: FirstError[0x10] : 0x0200
            SB0 encountered the first error
ErrorData[1]
  Date: Tue Jan 21 14:30:20 PST 2003
  Device: /partition0/domain0/SB4/bbcGroup0/repeaterepld
  Register: FirstError[0x10]: 0x00c0
            sbbc0 encountered the first error
            sbbc1 encountered the first error
ErrorData[2]
  Date: Tue Jan 21 14:30:20 PST 2003
  Device: /partition0/domain0/SB4/bbcGroup0/sbbc0
  ErrorID: 0x50121fff
  Register: ErrorStatus[0x80] : 0x00000300
                 SafErr [09:08] : 0x3 Fireplane device asserted an error
.
.
.
```

CHAPTER 8

System Controller Failover

Sun Fire midrange systems can be configured with two system controllers for high availability. In a high-availability system controller (SC) configuration, one SC serves as the *main* SC, which manages all the system resources, while the other SC serves as a *spare*. When certain conditions cause the main SC to fail, a switchover or *failover* from the main SC to the spare is triggered automatically, without operator intervention. The spare SC assumes the role of the main and takes over all system controller responsibilities.

This chapter explains the following:

- "SC Failover Overview" on page 113
- "SC Failover Prerequisites" on page 116
- "Conditions That Affect Your SC Failover Configuration" on page 117
- "Managing SC Failover" on page 117
- "Recovering After an SC Failover" on page 121

SC Failover Overview

The SC failover capability is enabled by default on Sun Fire midrange servers that have two System Controller boards installed. The failover capability includes both automatic and manual failover. In automatic SC failover, a failover is triggered when certain conditions cause the main SC to fail or become unavailable. In manual SC failover, you force the switchover of the spare SC to the main.

The failover software performs the following tasks to determine when a failover from the main SC to the spare is necessary and to ensure that the system controllers are failover-ready:

- Continuously checks the heartbeat of the main SC and the presence of the spare SC
- Copies data from the main SC to the spare SC at regular intervals so that the data on both system controllers is synchronized if a failover occurs

If at any time the spare SC is not available or does not respond, the failover mechanism disables SC failover. If SC failover is enabled, but the connection link between the SCs is down, failover remains enabled and active until the system configuration changes. After a configuration change, such as a change in platform or domain parameter settings, the failover mechanism remains enabled, but it is not active (SC failover is not in a failover-ready state because the connection link is down). You can check the SC failover state by using commands such as `showfailover` or `showplatform`, as explained in "To Obtain Failover Status Information" on page 119.

What Triggers an Automatic Failover

A failover from the main to the spare SC is triggered when one of the following failure conditions occurs:

- The heartbeat of the main SC stops.
- The main SC is rebooted but does not boot successfully.
- A fatal software error occurs.

What Happens During a Failover

An SC failover is characterized by the following:

- Failover event message.

  The SC failover is logged in the platform message log file, which is viewed on the console of the new main SC or through the `showlogs` command on the SC. The information displayed indicates that a failover has occurred and identifies the failure condition that triggered the failover.

  CODE EXAMPLE 8-1 shows the type of information that appears on the console of the spare SC when a failover occurs due to a stop in the main SC heartbeat:

CODE EXAMPLE 8-1 Messages Displayed During an Automatic Failover

```
Platform Shell - Spare System Controller

schostname:sc> Nov 12 01:15:42 schostname Platform.SC: SC Failover: enabled and
active.
```

CODE EXAMPLE 8-1 Messages Displayed During an Automatic Failover *(Continued)*

```
Nov 12 01:16:42 schostname Platform.SC: SC Failover: no heartbeat detected from
the Main SC
Nov 12 01:16:42 schostname Platform.SC: SC Failover: becoming main SC ...

Nov 12 01:16:49 schostname Platform.SC: Chassis is in single partition mode.
Nov 12 01:17:04 schostname Platform.SC: Main System Controller
Nov 12 01:17:04 schostname Platform.SC: SC Failover: disabled

schostname:SC>
```

- Change in the SC prompt.

  The prompt for the main SC is *hostname*:**SC**> . Note that the upper-case letters, **SC**, identify the main SC.

  The prompt for the spare SC is *hostname*:**sc**> . Note that the lower-case letters, **sc**, identify the spare SC.

  When an SC failover occurs, the prompt for the spare SC changes and becomes the prompt for the main SC (*hostname*:**SC**>), as shown in the last line of CODE EXAMPLE 8-1.

- Command execution is disabled.

  When an SC failover is in progress, command execution is disabled.

- Short recovery period.

  The recovery time for an SC failover from the main to the spare is approximately five minutes or less. This recovery period consists of the time required to detect a failure and direct the spare SC to assume the responsibilities of the main SC.

- No disturbance to running domains.

  The failover process does not affect any running domains, except for temporary loss of services from the system controller.

- Deactivation of the SC failover feature.

  After an automatic or manual failover occurs, the failover capability is automatically disabled. This prevents the possibility of repeated failovers back and forth between the two SCs.

- Remote connections to domain consoles are closed.

  A failover closes SSH or Telnet sessions connected to the domain console, and any domain console output is lost. When you reconnect to the domain through an SSH or Telnet session, you must specify the host name or IP address of the new main SC, unless you previously assigned a logical host name or IP address to your main system controller. See the next section for an explanation of the logical host name and IP address.

The remainder of this chapter describes SC failover prerequisites, conditions that affect your SC failover configuration, and how to manage SC failover, including how to recover after an SC failover occurs.

SC Failover Prerequisites

This section identifies SC failover prerequisites and optional platform parameters that can be set for SC failover:

- Same firmware version required on both the main and spare SC

  Starting with the 5.13.0 release, SC failover requires that you run the same version of the firmware on both the main and spare system controller. Be sure to follow the instructions for installing and upgrading the firmware described in the `Install.info` file that accompanies the firmware release.

- Optional platform parameter settings

  You can optionally perform the following after you install or upgrade the firmware on each SC:

  - Assign a logical host name or IP address to the main system controller.

    The logical host name or IP address identifies the working main system controller, even after a failover occurs. Assign the logical IP address or host name by running the `setupplatform` command on the main SC.

Note – The logical host name or IP address is required if you are using Sun Management Center software for Sun Fire midrange systems.

  - Use SNTP to keep the date and time values between the main and spare system controllers synchronized.

    The date and time between the two SCs must be synchronized, to ensure that the same time service is provided to the domains. Run the `setupplatform` command on each SC to identify the host name or IP address of the system to be used as the SNTP server (reference clock).

    For further information on setting the platform date and time, see "To Set the Date, Time, and Time Zone for the Platform" on page 48.

Conditions That Affect Your SC Failover Configuration

If you power cycle your system (power your system off then on), note the following:

- After a power cycle, the first system controller that boots `scapp` becomes the main SC.

  Certain factors, such as disabling or running SC POST with different diag levels, influence which SC is booted first.

- Be sure that SC failover is enabled and active before you power cycle your system, to ensure that data on both system controllers is current and synchronized.

  If SC failover is disabled at the time a power cycle occurs, it is possible for the new main SC to boot with a stale SC configuration.

  When SC failover is disabled, data synchronization does not occur between the main and spare SC. As a result, any configuration changes made on the main SC are not propagated to the spare. If the roles of the main and spare SC change after a power cycle, `scapp` on the new main SC will boot with a stale SC configuration. As long as SC failover is enabled and active, data on both SCs will be synchronized, and it will not matter which SC becomes the main SC after the power cycle.

Managing SC Failover

You control the failover state by using the `setfailover` command, which enables you to do the following:

- Disable SC failover
- Enable SC failover
- Perform a manual failover

You can also obtain failover status information through commands such as `showfailover` or `showplatform`. For details, see "To Obtain Failover Status Information" on page 119.

▼ To Disable SC Failover

- **From the platform shell on either the main or spare SC, type:**

```
schostname:SC> setfailover off
```

A message indicates failover is disabled. Note that SC failover remains disabled until you re-enable it (see the next procedure).

▼ To Enable SC Failover

- **From the platform shell on either the main or spare SC, type:**

```
schostname:SC> setfailover on
```

The following message is displayed while the failover software verifies the failover-ready state of the system controllers:

```
SC Failover: enabled but not active.
```

Within a few minutes, after failover readiness has been verified, the following message is displayed on the console, indicating that SC failover is activated:

```
SC Failover: enabled and active.
```

▼ To Perform a Manual SC Failover

1. **Be sure that other SC commands are not currently running on the main SC.**

2. **From the platform shell on either the main or spare SC, type:**

```
schostname:SC> setfailover force
```

A failover from one SC to the other occurs, unless there are fault conditions (for example, the spare SC is not available or the connection link between the SCs is down) that prevent the failover from taking place.

A message describing the failover event is displayed on the console of the new main SC.

Be aware that the SC failover capability is automatically disabled after the failover. If at some point you need the SC failover feature, be sure to re-activate failover (see "To Enable SC Failover" on page 118).

▼ To Obtain Failover Status Information

- **Run any of the following commands from either the main or spare SC to display failover information:**
  - The `showfailover`(1M) command displays SC failover state information. For example:

CODE EXAMPLE 8-2 `showfailover` Command Output Example

```
schostname:SC> showfailover -v
SC: SSC0
Main System Controller
SC Failover: enabled and active.
Clock failover enabled.
```

The SC failover state can be one of the following:

- `enabled and active` – SC failover is enabled and functioning normally.
- `disabled` – SC failover has been disabled as a result of an SC failover or because the SC failover feature was specifically disabled (through the `setfailover off` command)
- `enabled but not active` – SC failover is enabled, but certain hardware components, such as the spare SC or the centerplane between the main and spare SC, are not in a failover-ready state.

- degraded – The SC failover configuration is *degraded* when the main and spare SC are running different firmware versions, and the following conditions exist:
  - The main SC has a higher firmware version than the spare.
  - A board in the system can be controlled by the main SC but not the spare.

  In this case, the showfailover -v output indicates that the failover configuration is degraded and identifies the boards that cannot by managed by the spare SC. For example:

CODE EXAMPLE 8-3 showfailover Command Output – Failover Degraded Example

```
schostname:SC> showfailover -v
SC: SSC0
Main System Controller
SC Failover: enabled and active.
Clock failover enabled.
SC Failover: Failover is degraded
SC Failover: Please upgrade the other SC SSC1 running 5.13.0
SB0: COD CPU Board V2 not supported on 5.13.0
SB2: CPU Board V3 not supported on 5.13.0
.
.
.
```

  If a degraded failover condition occurs, upgrade the spare system controller firmware to the same version used by the main system controller. For firmware upgrade instructions, refer to the Install.info file that accompanies the firmware release.

- The showplatform and showsc commands also display failover information, similar to the output of the showfailover command shown in CODE EXAMPLE 8-2.
- The showboards command identifies the state of the System Controller boards, either Main or Spare.

For details on these commands, refer to their descriptions in the *Sun Fire Midrange System Controller Command Reference Manual*.

Recovering After an SC Failover

This section explains the recovery tasks that you must perform after an SC failover occurs.

▼ To Recover After an SC Failover Occurs

1. **Identify the failure point or condition that caused the failover and determine how to correct the failure.**

   a. **Use the `showlogs` command to review the platform messages logged for the working SC.**

   Evaluate these messages for failure conditions and determine the corrective action needed to reactivate any failed components. For details on the `showlogs` command, refer to the *Sun Fire Midrange System Controller Command Reference Manual*.

   b. **If the `syslog` loghost has been configured, review the platform loghost to see any platform messages for the failed SC.**

   c. **If you need to replace a failed System Controller board, see "To Remove and Replace a System Controller Board in a Redundant SC Configuration" on page 158.**

   If you need to hot-plug an SC (remove an SC that has been powered off and then insert a replacement SC), be sure to verify that the clock signals to the system boards are coming from the new main SC before you perform the hot-plug operation. Run the `showboards -p clock` command to verify the clock signal source.

   d. **If an automatic failover occurred while you were running the `flashupdate`, `setkeyswitch`, or DR commands, rerun those commands after you resolve the failure condition.**

   Any `flashupdate`, `setkeyswitch`, or DR operations are stopped when an automatic failover occurs. However, if you were running configuration commands such as `setupplatform`, it is possible that some configuration changes occurred before the failover. Be sure to verify whether any configuration changes were made

   For example, if you were running the `setupplatform` command when an automatic failover occurred, use the `showplatform` command to verify any configuration changes made before the failover. After you resolve the failure condition, run the appropriate commands to update your configuration as needed.

2. **After you resolve the failover condition, re-enable SC failover by using the** `setfailover on` **command (see** **"To Enable SC Failover" on page 118****).**

CHAPTER 9

Capacity on Demand

Sun Fire midrange systems are configured with processors (CPUs) on CPU/Memory boards. These boards are purchased as part of your initial system configuration or as add-on components. The right to use the CPUs on these boards is included with the initial purchase price.

The Capacity on Demand (COD) option provides additional processing resources that you pay for when you use them. Through the COD option, you purchase and install unlicensed COD CPU/Memory boards in your system. Each COD CPU/Memory board contains four CPUs, which are considered as available processing resources. However, you do not have the right to use these COD CPUs until you also purchase the right-to-use (RTU) licenses for them. The purchase of a COD RTU license entitles you to receive a license key, which enables the appropriate number of COD processors.

You use COD commands included with the firmware for Sun Fire midrange systems to allocate, activate, and monitor your COD resources.

This chapter covers the following topics:

- "COD Overview" on page 123
- "Getting Started with COD" on page 126
- "Managing COD RTU Licenses" on page 127
- "Activating COD Resources" on page 131
- "Monitoring COD Resources" on page 133

COD Overview

The COD option provides additional CPU resources on COD CPU/Memory boards that are installed in your system. Although your midrange system comes configured with a minimum number of standard (active) CPU/Memory boards, your system

can have a mix of both standard and COD CPU/Memory boards installed, up to the maximum capacity allowed for the system. At least one active CPU is required for each domain in the system.

If you want the COD option, and your system is not currently configured with COD CPU/Memory boards, contact your Sun sales representative or authorized Sun reseller to purchase COD CPU/Memory boards. Your salesperson will work with your service provider to install the COD CPU/Memory boards in your system.

The following sections describe the main elements of the COD option:

- COD Licensing Process
- COD RTU License Allocation
- Instant Access CPUs
- Instant Access CPUs as Hot-Spares
- Resource Monitoring

COD Licensing Process

COD RTU licenses are required to enable COD CPU resources. COD licensing involves the following tasks:

1. Obtaining COD RTU License Certificates and COD RTU license keys for COD resources to be enabled

   You can purchase COD RTU licenses at any time from your Sun sales representative or reseller. You can then obtain a license key (for the COD resources purchased) from the Sun License Center.

2. Entering the COD RTU license keys in the COD license database

   The COD license database stores the license keys for the COD resources that you enable. You record this license information in the COD license database by using the `addcodlicense` command. The COD RTU licenses are considered as floating licenses and can be used for any COD CPU resource installed in the system.

For details on completing the licensing tasks, see "To Obtain and Add a COD RTU License Key to the COD License Database" on page 128.

COD RTU License Allocation

With the COD option, your system is configured to have a certain number of COD CPUs available, as determined by the number of COD CPU/Memory boards and COD RTU licenses that you purchase. The COD RTU licenses that you obtain are handled as a pool of available licenses.

When you activate a domain containing a COD CPU/Memory board or when a COD CPU/Memory board is connected to a domain through a dynamic reconfiguration (DR) operation, the following occurs automatically:

- The system checks the current COD RTU licenses installed.
- The system obtains a COD RTU license (from the license pool) for each CPU on the COD board.

The COD RTU licenses are allocated to the CPUs on a "first come, first serve" basis. However, you can allocate a specific quantity of RTU licenses to a particular domain by using the `setupplatform` command. For details, see "To Enable or Disable Instant Access CPUs and Reserve Domain RTU Licenses" on page 132.

If there is an insufficient number of COD RTU licenses and a license cannot be allocated to a COD CPU, the COD CPU is not configured into the domain and is considered as unlicensed. The COD CPU is also assigned a COD-disabled status. If a COD CPU/Memory board does not have sufficient COD RTU licenses for its COD CPUs, the system will fail the COD CPU/Memory board during the `setkeyswitch on` operation. For additional details and examples, see "COD-Disabled CPUs" on page 137.

When you remove a COD CPU/Memory board from a domain through a DR operation or when a domain containing a COD CPU/Memory board is shut down normally, the COD RTU licenses for the CPUs on those boards are released and added to the pool of available licenses.

You can use the `showcodusage` command to review COD usage and COD RTU license states. For details on `showcodusage` and other commands that provide COD information, see "Monitoring COD Resources" on page 133.

Note – You can move COD boards between Sun Fire systems (Sun Fire 15K, 12K, E6900, E4900, 6800, 4810, 4800, and 3800 servers), but the associated license keys are tied to the original platform for which they were purchased and are not transferable.

Instant Access CPUs

If you require COD CPU resources before you complete the COD RTU license purchasing process, you can temporarily enable a limited number of resources called *instant access CPUs* (also referred to as *headroom)*. These instant access CPUs are available as long as there are unlicensed COD CPUs in the system. The maximum number of instant access resources available on Sun Fire midrange systems is four CPUs.

Instant access CPUs are disabled by default on Sun Fire midrange systems. If you want to use these resources, you activate them by using the `setupplatform` command. Warning messages are logged on the platform console, informing you that the number of instant access CPUs (headroom) used exceeds the number of COD licenses available. Once you obtain and add the COD RTU license keys for additional instant access CPUs to the COD license database, these warning messages will stop.

For details on activating instant access CPUs, see, "To Enable or Disable Instant Access CPUs and Reserve Domain RTU Licenses" on page 132.

Instant Access CPUs as Hot-Spares

You can temporarily enable an available, instant access CPU to replace a failed non-COD CPU. In this case, the instant access CPU is considered as a *hot-spare* (a spare CPU that can be used immediately to replace a failed non-COD CPU). However, once the failed non-COD CPU has been replaced, you must deactivate the instant access CPU (see "To Enable or Disable Instant Access CPUs and Reserve Domain RTU Licenses" on page 132). Contact your Sun sales representative or reseller to purchase a COD RTU license for the instant access CPU in use if you want to continue using it.

Resource Monitoring

Information about COD events, such as the activation of instant access CPUs (headroom) or license violations, is recorded in platform console log messages and also in the output for the `showlogs` command.

Other commands, such as the `showcodusage` command, provide information on COD components and COD configuration. For details on obtaining COD information and status, see "Monitoring COD Resources" on page 133.

Getting Started with COD

Before you can use COD on Sun Fire midrange systems, you must complete certain prerequisites. These tasks include the following:

- Installing the same version of the firmware (starting with release 5.14.0) on both the main and spare system controller (SC).

For details on upgrading the firmware, refer to the `Install.info` file that accompanies the firmware release.

Note – Sun Fire midrange systems firmware before version 5.14.0 will not recognize COD CPU/Memory boards.

- Contacting your Sun sales representative or reseller and doing the following:
  - Signing the COD contract addendum, in addition to the standard purchasing agreement contract for your Sun Fire midrange system.
  - Purchasing COD CPU/Memory boards and arranging for their installation.
- Performing the COD RTU licensing process as described in "To Obtain and Add a COD RTU License Key to the COD License Database" on page 128.

Managing COD RTU Licenses

COD RTU license management involves the acquisition and addition of COD RTU licenses keys to the COD license database. You can also remove COD RTU licenses from the license database if needed.

Note that COD license key information is always associated with a particular system. You may encounter invalid COD RTU licenses if you do any of the following:

- Move a System Controller board from one system to another.
- Copy the platform and domain configuration files (generated by the `dumpconfig` command) from one system to another, and restore the configuration files on the second system by running the `restoreconfig` command.

Any COD RTU license keys for the original system now reside on the second system, but the license keys remain associated with the original system. These license keys will be considered invalid. To prevent invalid COD RTU license keys, run the `setdefaults` command on the first system (to set the default system configuration values) before you remove a System Controller board or before you use the `dumpconfig` command to save the platform and domain configurations. If you do not run the `setdefaults` command on the first system, you can run the command on the second system after you insert the System Controller board.

▼ To Obtain and Add a COD RTU License Key to the COD License Database

1. **Contact your Sun sales representative or authorized Sun reseller to purchase a COD RTU license for each COD CPU to be enabled.**

   Sun will send you a COD RTU License Certificate for each CPU license that you purchase. The COD RTU license sticker on the License Certificate contains a right-to-use serial number used to obtain a COD RTU license key.

2. **Contact the Sun License Center and provide the following information to obtain a COD RTU license key:**

   - The COD RTU serial number from the license sticker on the COD RTU License Certificate
   - The Chassis HostID of the system, which identifies your system

     To obtain the Chassis HostID of your system, run the `showplatform -p cod` command.

   For instructions on contacting the Sun License Center, refer to the COD RTU License Certificate that you received or check the Sun License Center Web site:

   `http://www.sun.com/licensing`

   The Sun License Center will send you an email message containing the RTU license key for the COD resources that you purchased.

3. **Add the license key to the COD license database by using the `addcodlicense` command. From the platform shell on the main SC, type:**

schostname`:SC>` **`addcodlicense`** *license-signature*

   where:

   license-signature is the complete COD RTU license key assigned by the Sun License Center. You can copy the license key string that you receive from the Sun License Center.

4. **Verify that the specified license key was added to the COD license database by running the `showcodlicense -r` command (see "To Review COD License Information" on page 129).**

   The COD RTU license key that you added should be listed in the `showcodlicense` output.

▼ To Delete a COD License Key From the COD License Database

1. **From the platform shell on the main SC, type:**

```
schostname:SC> deletecodlicense license-signature
```

where:

license-signature is the complete COD RTU license key to be removed from the COD license database.

The system verifies that the license removal will not cause a COD RTU license violation, which occurs when there is an insufficient number of COD licenses for the number of COD resources in use. If the deletion will cause a COD RTU license violation, the SC will not delete the license key.

Note – You can force the removal of the license key by specifying the `-f` option with the `deletecodlicense` command. However, be aware that the license key removal could cause a license violation or an overcommittment of RTU license reservations. An RTU license overcommittment occurs when there are more RTU domain reservations than RTU licenses installed in the system. For additional details, refer to the `deletecodlicense` command description in the *Sun Fire Midrange System Controller Command Reference Manual*.

---

2. **Verify that the license key was deleted from the COD license database by running the `showcodlicense -r` command, described in the next procedure.**

The deleted license key should not be listed in the `showcodlicense` output.

▼ To Review COD License Information

- **From the platform shell on the main SC, do one of the following to display COD license information:**
  - To view license data in an interpreted format, type:

```
schostname:SC> showcodlicense
```

For example:

```
schostname:SC> showcodlicense
Description  Ver   Expiration  Count  Status
-----------  ---   ----------  -----  ------
PROC          01         NONE      8  GOOD
```

TABLE 9-1 describes the COD license information in the `showcodlicense` output.

TABLE 9-1 COD License Information

Item	Description
Description	Type of resource (processor).
Ver	Version number of the license.
Expiration	None. Not supported (no expiration date).
Count	Number of RTU licenses granted for the given resource.
Status	One of the following states: • GOOD – Indicates the resource license is valid. • EXPIRED – Indicates the resource license is no longer valid.

- To view license data in raw license key format, type:

```
schostname:SC> showcodlicense -r
```

The license key signatures for COD resources are displayed. For example:

```
schostname:SC> showcodlicense -r
01:80d8a9ed:45135285:0201000000:8:00000000:00000000000000000000
```

Note – The COD RTU license key listed above is provided as an example and is not a valid license key.

For details on the `showcodlicense` command, refer to the command description in the *Sun Fire Midrange System Controller Command Reference Manual*.

Activating COD Resources

To activate instant access CPUs and allocate COD RTU licenses to specific domains, use the `setupplatform` command. TABLE 9-2 describes the various `setupplatform` command options that can be used to configure COD resources

TABLE 9-2 `setupplatform` Command Options for COD Resource Configuration

Command Option	Description
`setupplatform -p cod`	Enables or disables instant access CPUs (headroom) and allocates domain COD RTU licenses.
`setupplatform -p cod` *headroom-number*	Enables or disables instant access CPUs (headroom).
`setupplatform -p cod -d` *domainID RTU-number*	Reserves a specific quantity of COD RTU licenses for a particular domain.

For details on the `setupplatform` command options, refer to the command description in the *Sun Fire Midrange System Controller Command Reference Manual*.

▼ To Enable or Disable Instant Access CPUs and Reserve Domain RTU Licenses

1. **From the platform shell on the main SC, type:**

```
schostname:SC> setupplatform -p cod
```

You are prompted to enter the COD parameters (headroom quantity and domain RTU information). For example:

```
schostname:SC> setupplatform -p cod
COD
---
PROC RTUs installed: 8
PROC Headroom Quantity (0 to disable, 4 MAX) [0]:
PROC RTUs reserved for domain A (6 MAX) [0]: 2
PROC RTUs reserved for domain B (6 MAX) [2]:
PROC RTUs reserved for domain C (4 MAX) [0]:
PROC RTUs reserved for domain D (4 MAX) [0]:
```

Note the following about the prompts displayed:

- Instant access CPU (headroom) quantity

  The text in parentheses indicates the maximum number of instant access CPUs (headroom) allowed. The value inside the brackets is the number of instant access CPUs currently configured.

  To disable the instant access CPU (headroom) feature, type 0. You can disable the headroom quantity only when there are no instant access CPUs in use.

- Domain reservations

  The text in parentheses indicates the maximum number of RTU licenses that can be reserved for the domain. The value inside the brackets is the number of RTU licenses currently allocated to the domain.

2. **Verify the COD resource configuration with the `showplatform` command:**

```
schostname:SC> showplatform -p cod
```

For example:

```
schostname:SC> showplatform -p cod
Chassis HostID: 80d88800
PROC RTUs installed: 8
PROC Headroom Quantity: 0
PROC RTUs reserved for domain A: 2
PROC RTUs reserved for domain B: 2
PROC RTUs reserved for domain C: 0
PROC RTUs reserved for domain D: 0
```

Monitoring COD Resources

This section describes various ways to track COD resource use and obtain COD information.

COD CPU/Memory Boards

You can determine which CPU/Memory boards in your system are COD boards by using the `showboards` command.

▼ To Identify COD CPU/Memory Boards

- **From the platform shell on the main SC, type:**

```
schostname:SC> showboards
```

COD CPU/Memory boards are identified as COD CPU boards. For example:

```
schostname:SC> showboards
Slot      Pwr Component Type                 State      Status     Domain
----      --- --------------                 -----      ------     ------
SSC0      On  System Controller V2           Main       Passed     -
SSC1      On  Present                        Spare      -          -
ID0       On  Sun Fire 6800 Centerplane      -          OK         -
PS0       On  A184 Power Supply              -          OK         -
PS1       On  A184 Power Supply              -          OK         -
PS2       Off A184 Power Supply              -          OK         -
PS3       Off A184 Power Supply              -          OK         -
PS4       On  A184 Power Supply              -          OK         -
PS5       On  A184 Power Supply              -          OK         -
FT0       On  Fan Tray                       Low Speed  OK         -
FT1       On  Fan Tray                       Low Speed  OK         -
FT2       On  Fan Tray                       Low Speed  OK         -
FT3       On  Fan Tray                       Low Speed  OK         -
RP0       On  Repeater Board                 -          OK         -
RP1       On  Repeater Board                 -          OK         -
RP2       On  Repeater Board                 -          OK         -
RP3       On  Repeater Board                 -          OK         -
/N0/SB0   On  COD CPU Board V3               Active     Passed     A
/N0/SB1   On  COD CPU Board V3               Active     Passed     A
/N0/SB2   On  COD CPU Board V3               Active     Passed     A
/N0/SB3   On  COD CPU Board V3               Active     Passed     A
/N0/SB4   On  COD CPU Board V3               Active     Passed     A
/N0/SB5   On  COD CPU Board V3               Active     Passed     A
/N0/IB6   On  PCI I/O Board                  Active     Passed     A
/N0/IB7   On  PCI I/O Board                  Active     Passed     A
/N0/IB8   On  PCI I/O Board                  Active     Passed     A
/N0/IB9   Off PCI I/O Board                  Available  Not tested Isolated
```

COD Resource Usage

To obtain information on how COD resources are used in your system, use the `showcodusage` command.

▼ To View COD Usage by Resource

- **From the platform shell on the main SC, type:**

```
schostname:SC> showcodusage -p resource
```

For example:

```
schostname:SC> showcodusage -p resource
Resource       In Use  Installed  Licensed  Status
--------       ------  ---------  --------  ------
PROC                0          4         8  OK: 8 available Headroom: 2
```

TABLE 9-3 describes the COD resource information displayed by the `showcodusage` command.

TABLE 9-3 `showcodusage` Resource Information

Item	Description
Resource	The COD resource (processor)
In Use	The number of COD CPUs currently used in the system
Installed	The number of COD CPUs installed in the system
Licensed	The number of COD RTU licenses installed
Status	One of the following COD states: • OK – Indicates there are sufficient licenses for the COD CPUs in use and specifies the number of remaining COD resources available and the number of any instant access CPUs (headroom) available • HEADROOM – The number of instant access CPUs in use. • VIOLATION – Indicates a license violation exists. Specifies the number of COD CPUs in use that exceeds the number of COD RTU licenses available. This situation can occur when you force the deletion of a COD license key from the COD license database, but the COD CPU associated with that license key is still in use.

▼ To View COD Usage by Domain

- **From the platform shell on the main SC, type:**

```
schostname:SC> showcodusage -p domains -v
```

The output includes the status of CPUs for all domains. For example:

```
schostname:SC> showcodusage -p domains -v
Domain/Resource  In Use  Installed  Reserved  Status
---------------  ------  ---------  --------  ------
A - PROC              0          0         4
B - PROC              0          0         4
C - PROC              0          0         0
D - PROC              0          0         0
Unused - PROC         0          4         0
     SB4 - PROC       0          4
     SB4/P0                                    Unused
     SB4/P1                                    Unused
     SB4/P2                                    Unused
     SB4/P3                                    Unused
```

TABLE 9-4 describes the COD resource information displayed by domain.

TABLE 9-4 `showcodusage` Domain Information

Item	Description
Domain/Resource	The COD resource (processor) for each domain. An unused processor is a COD CPU that has not yet been assigned to a domain.
In Use	The number of COD CPUs currently used in the domain.
Installed	The number of COD CPUs installed in the domain.
Reserved	The number of COD RTU licenses allocated to the domain.
Status	One of the following CPU states: • Licensed – The COD CPU has a COD RTU license. • Unused – The COD CPU is not in use. • Unlicensed – The COD CPU could not obtain a COD RTU license and is not in use.

▼ To View COD Usage by Resource and Domain

- **From the platform shell on the main SC, type:**

```
schostname:SC> showcodusage -v
```

The information displayed contains usage information by both resource and domain. For example:

```
schostname:SC> showcodusage -v
Resource       In Use  Installed  Licensed  Status
--------       ------  ---------  --------  ------
PROC                0          4         8  OK: 8 available Headroom: 2
Domain/Resource  In Use  Installed  Reserved  Status
---------------  ------  ---------  --------  ------
A - PROC              0          0         4
B - PROC              0          0         4
C - PROC              0          0         0
D - PROC              0          0         0
Unused - PROC         0          4         0
     SB4 - PROC       0          4
     SB4/P0                                    Unused
     SB4/P1                                    Unused
     SB4/P2                                    Unused
     SB4/P3                                    Unused
```

COD-Disabled CPUs

When you activate a domain that uses COD CPU/Memory boards, any COD CPUs that did not obtain a COD RTU license are disabled by the SC. You can determine which COD CPUs were disabled by reviewing the following items:

- The domain console log for a `setkeyswitch on` operation

  Any COD CPUs that did not obtain a COD RTU license are identified as `Cod-dis` (abbreviation for COD-disabled). If all the COD CPUs on a COD/Memory board are disabled, the `setkeyswitch on` operation will also fail the COD CPU/Memory board, as CODE EXAMPLE 9-1 shows.

CODE EXAMPLE 9-1 Domain Console Log Output Containing Disabled COD CPUs

```
schostname:A> setkeyswitch on
{/N0/SB3/P0} Passed
```

CODE EXAMPLE 9-1 Domain Console Log Output Containing Disabled COD CPUs *(Continued)*

```
{/N0/SB3/P1} Passed
{/N0/SB3/P2} Passed
{/N0/SB3/P3} Passed
{/N0/SB3/P0} Cod-dis
{/N0/SB3/P1} Cod-dis
{/N0/SB3/P2} Cod-dis
{/N0/SB3/P3} Cod-dis
.
.
.
Entering OBP ...
Jun 27 19:04:38 schostname Domain-A.SC: Excluded unusable, unlicensed, failed
or disabled board: /N0/SB3
```

- The `showcomponent` command output

  CODE EXAMPLE 9-2 shows the type of status information displayed for each component in the system. If a COD RTU license cannot be allocated to a COD CPU, the COD CPU status is listed as `Cod-dis` (abbreviation for COD-disabled).

CODE EXAMPLE 9-2 `showcomponent` Command Output – Disabled COD CPUs

```
schostname:SC> showcomponent
Component          Status   Pending POST   Description
---------          ------   ------- ----   -----------
.
.
.
/N0/SB3/P0         Cod-dis  -       untest UltraSPARC-IV, 1050MHz, 16M ECache
/N0/SB3/P1         Cod-dis  -       untest UltraSPARC-IV, 1050MHz, 16M ECache
/N0/SB3/P2         Cod-dis  -       untest UltraSPARC-IV, 1050MHz, 16M ECache
/N0/SB3/P3         Cod-dis  -       untest UltraSPARC-IV, 1050MHz, 16M ECache
/N0/SB3/P0/B0/L0   Cod-dis  -       untest 2048M DRAM
/N0/SB3/P0/B0/L2   Cod-dis  -       untest 2048M DRAM
/N0/SB3/P0/B1/L1   Cod-dis  -       untest 2048M DRAM
/N0/SB3/P0/B1/L3   Cod-dis  -       untest 2048M DRAM
/N0/SB3/P1/B0/L0   Cod-dis  -       untest 2048M DRAM
/N0/SB3/P1/B0/L2   Cod-dis  -       untest 2048M DRAM
/N0/SB3/P1/B1/L1   Cod-dis  -       untest 2048M DRAM
/N0/SB3/P1/B1/L3   Cod-dis  -       untest 2048M DRAM
/N0/SB3/P2/B0/L0   Cod-dis  -       untest 2048M DRAM
.
.
.
```

Other COD Information

TABLE 9-5 summarizes the COD configuration and event information that you can obtain through other system controller commands. For further details on these commands, refer to their descriptions in the *Sun Fire Midrange System Controller Command Reference Manual.*

TABLE 9-5 Obtaining COD Configuration and Event Information

Command	Description
`showdomain`	Displays the status of COD RTU license reservations for the domain.
`showlogs`	Displays information about COD events, such as license violations or headroom activation, that are logged on the platform console.
`showplatform -p cod`	Displays the current COD resource configuration and related information: • Number of instant access CPUs (headroom) in use • Domain RTU license reservations • Chassis HostID

CHAPTER 10

Testing System Boards

The CPU/Memory board and I/O assembly are the only boards with directed tests.

This chapter contains the following topics on testing:

- "Testing a CPU/Memory Board" on page 141
- "Testing an I/O Assembly" on page 142

Testing a CPU/Memory Board

Use the `testboard` system controller command to test the CPU/Memory board name you specify on the command line. This command is available in both the platform and domain shells.

Before you test a CPU/Memory board, note the following board requirements:

- Domain cannot be active.
- Board power must be on.
- Repeater boards used to run the domain must also be powered on. See "Repeater Boards" on page 19 for the Repeater boards needed to run the domain.
- Board *must not* be part of an active domain. The board should be in the Assigned state (if running from a domain shell). Use `showboards` to display the board state.

▼ To Test a CPU/Memory Board

To test a CPU/Memory board from a domain A shell, type the `testboard` command:

```
schostname:A> testboard sbx
```

where sb*x* is `sb0` through `sb5` (CPU/Memory boards).

For complete command syntax and examples, refer to the `testboard` command in the *Sun Fire Midrange System Controller Command Reference Manual*.

Testing an I/O Assembly

You cannot test an I/O assembly with the `testboard` command. Testing a board with `testboard` requires CPUs to test a board. No CPUs are present on an I/O assembly.

To test an I/O assembly with POST, you must construct a spare domain with the unit under test and a board with working CPUs. The spare domain must meet these requirements:

- Cannot be active
- Contains at least one CPU/Memory board

If your spare domain *does not* meet these requirements, the procedure, "To Test an I/O Assembly" on page 142, explains how to:

- Halt the Solaris operating environment in the spare domain
- Assign a CPU/Memory board to the spare domain

▼ To Test an I/O Assembly

1. **Verify that you have a spare domain. Type the `showplatform` command from the platform shell.**

   If you have a spare domain, go to Step 3. If you do not have a spare domain, continue with Step 2.

2. **Complete these steps if you do not have a spare domain.**

- If you have a system with one partition and one domain, add a second domain to the partition.

  See "Creating and Starting Domains" on page 55. Go to Step 3.

- If you have a system with one partition and the partition contains two domains, create a spare domain in the second partition:

  a. Shut down all running domains in the chassis.

  b. Change the partition mode to dual by running the `setupplatform` command.

     See the `setupplatform` command in the *Sun Fire Midrange System Controller Command Reference Manual*.

  c. Create a spare domain in the second partition.

     See "Creating and Starting Domains" on page 55.

3. **Enter the domain shell (`a` through `d`) of a spare domain.**

   See "System Controller Navigation" on page 36.

4. **If the spare domain is running the Solaris operating environment (`#`, `%` prompts displayed), halt the Solaris operating environment in the domain.**

```
root# init 0
ok
```

5. **Verify if the spare domain contains at least one CPU/Memory board by typing the `showboards` command.**

   If you need to add a CPU/Memory board to the spare domain, go to Step 6. Otherwise, go to Step 7.

6. **Assign a CPU/Memory board with a minimum of one CPU to the spare domain by using the `addboard` command.**

   This example shows assigning a CPU/Memory board to domain B (in the domain B shell)

```
schostname:B> addboard sbx
```

   where sb*x* is `sb0` through `sb5`.

7. **Assign the I/O assembly you want to test on the spare domain by using the `addboard` command.**

   This example shows assigning an I/O assembly to domain B (in the domain B shell).

```
schostname:B> addboard ibx
```

   where *x* is `6`, `7`, `8`, or `9`.

8. **Run the `setupdomain` command to configure parameter settings, such as `diag-level`, `post-tolerate-ce`, and `verbosity-level`.**

   This command is an interactive command. For command syntax and a code example, refer to the `setupdomain` command in the *Sun Fire Midrange System Controller Command Reference Manual*.

9. **Verify that the date and time are set correctly by using the `showdate` command.**

   If the date and time are not set correctly, reset the date and time with `setdate`.

   For complete `setdate` command syntax and examples, refer to the `setdate` command in the *Sun Fire Midrange System Controller Command Reference Manual*.

10. **Turn the keyswitch on in the spare domain.**

   This action runs POST in the domain.

```
schostname:B> setkeyswitch on
.
.
ok
```

   The I/O assembly is tested. However, the cards in the I/O assembly are not tested. To test the cards in the I/O assembly, you must boot the Solaris operating environment.

   - If the `setkeyswitch` operation succeeds:

     You will see the `ok` prompt, which means that it is likely that the I/O assembly is working. However, it is possible that some components have been disabled. You can also view the output of the `showboards` command to view the status of the boards after testing.

   - If POST finds errors:

     Error messages are displayed of the test that failed. Check the POST output for error messages. If the `setkeyswitch` operation fails, an error message is displayed telling you why the operation failed. You will obtain the domain shell.

11. **Obtain the domain shell from the domain console.**

   See "To Go From a Domain Console To a Domain Shell" on page 38.

12. **Turn the keyswitch to standby.**

```
schostname:B> setkeyswitch standby
```

13. **Delete the I/O assembly in the spare domain by using the `deleteboard` command:**

```
schostname:B> deleteboard ibx
```

where *x* is the board number you typed in Step 7.

14. **Exit the spare domain shell and return to the domain you were in before entering the spare domain.**

See "System Controller Navigation" on page 36.

CHAPTER 11

Removing and Replacing Boards

The *Sun Fire 6800/4810/4800/3800 Systems Service Manual* and the *Sun Fire E6900/E4900 Systems Service Manual* provide instructions for physically removing and replacing boards. However, board removal and replacement also involves firmware steps that must be performed before a board is removed from the system and after a new board replaces the old one. This chapter discusses the firmware steps involved with the removal and replacement of the following boards, cards, and assemblies:

- "CPU/Memory Boards and I/O Assemblies" on page 148
- "CompactPCI and PCI Cards" on page 153
- "Repeater Boards" on page 154
- "System Controller Board" on page 156
- "ID Board and Centerplane" on page 159

This chapter also discusses how to unassign a board from a domain and disable the board.

To troubleshoot board and component failures, see "Board and Component Failures" on page 169. To remove and install the FrameManager, ID board, power supplies, and fan trays, refer to the *Sun Fire 6800/4810/4800/3800 Systems Service Manual* and the *Sun Fire E6900/E4900 Systems Service Manual.*

Before you begin, have the following books available:

- *Sun Hardware Platform Guide*
- *Sun Fire Midrange Systems Dynamic Reconfiguration User Guide*
- *Sun Fire 6800/4810/4800/3800 Systems Service Manual or the Sun Fire E6900/E4900 Systems Service Manual*

You will need these books for Solaris operating environment steps and the hardware removal and installation steps. The *Sun Hardware Platform Guide* and the *Sun Fire Midrange Systems Dynamic Reconfiguration User Guide* are available with your Solaris operating environment release.

CPU/Memory Boards and I/O Assemblies

The following procedures describe the software steps involved with:

- Removing and replacing a system board (CPU/Memory board or I/O assembly)
- Unassigning a system board from a domain or disable a system board
- Hot-swapping a CPU/Memory board or an I/O assembly

Refer to the *Sun Fire Midrange Systems Dynamic Reconfiguration User Guide* for details on:

- Moving a CPU/Memory board or an I/O assembly between domains.
- Disconnecting a CPU/Memory board or I/O assembly. (Leave it in the system until a replacement board is available.)

▼ To Remove and Replace a System Board

This procedure does *not* involve dynamic reconfiguration commands.

1. **Access the domain that contains the board or assembly to be removed by performing the following:**

   a. **Connect to the domain console.**

   For details on accessing the domain console, see "To Navigate Between The Platform Shell And a Domain" on page 37 and "To Go From a Domain Shell To a Domain Console" on page 38.

   b. **Halt the Solaris operating environment from the domain console as superuser.**

```
root# init 0
ok
```

   c. **Type the escape sequence to get to the domain shell prompt.**

   By default, the escape sequence is **#.**, the pound sign, followed by a period.

```
ok #.
schostname:A>
```

   The domain shell prompt is displayed.

2. **Turn the domain keyswitch to the standby position with the `setkeyswitch standby` command and then power off the board or assembly.**

```
schostname:A> setkeyswitch standby
schostname:A> poweroff board_name
```

where *board_name* is `sb0` - `sb5` or `ib6` - `ib9`.

Verify the green power LED ( ) is off.

3. **Remove the board or assembly and replace with a new board or assembly.**

Refer to the *Sun Fire 6800/4810/4800/3800 Systems Service Manual* or the *Sun Fire E6900/E4900 Systems Service Manual.*

4. **Power on the board or assembly.**

```
schostname:SC> poweron board_name
```

where *board_name* is `sb0`–`sb5` or `ib6`–`ib9`.

5. **Check the version of the firmware that is installed on the board by using the `showboards` command:**

```
schostname:SC> showboards -p version
```

The firmware version of the new replacement board must be compatible with the system controller firmware.

6. **If the firmware version of the replacement board or assembly is not compatible with the SC firmware, update the firmware on the board.**

   a. **Use the `flashupdate -c` command to update the firmware from another board in the current domain.**

```
schostname:SC> flashupdate -c source_board destination_board
```

For details on the `flashupdate` command syntax, refer to the command description in the *Sun Fire Midrange System Controller Command Reference Manual*.

   b. **After you run the `flashupdate` command to update the board firmware to a compatible firmware version, and if the board is in a `Failed` state, as indicated by `showboards` output, power off the board to clear the `Failed` state.**

7. **Before you bring an I/O assembly back to the Solaris operating environment, test the I/O assembly in a spare domain that contains at least one CPU/Memory board with a minimum of one CPU.**

   a. **Enter a spare domain.**

   b. **Test the I/O assembly.**

      See "Testing an I/O Assembly" on page 142.

8. **Turn the domain keyswitch to the on position with the** `setkeyswitch on` **command.**

```
schostname:A> setkeyswitch on
```

   This command turns the domain on and boots the Solaris operating environment if the OpenBoot PROM parameters are set as follows:

   - System controller `setupdomain OBP.auto-boot?` parameter is set to `true`.
   - OpenBoot PROM `boot-device` parameter is set to the proper boot device.

   If the Solaris operating environment did not boot automatically, continue with Step 9. If the appropriate OpenBoot PROM parameters are not set up to take you to the `login:` prompt, you will see the `ok` prompt. For more information on the OpenBoot PROM parameters, refer to the OpenBoot documentation included in the Sun Hardware Documentation Set.

9. **At the** `ok` **prompt, type the** `boot` **command:**

```
ok boot
```

   After the Solaris operating environment is booted, the `login:` prompt is displayed.

▼ To Unassign a Board From a Domain or Disable a System Board

If a CPU/Memory board or I/O assembly fails, perform one of the following tasks:

- Unassign the board from the domain. See "To Unassign a Board From a Domain" on page 72.
- Disable the component location status for the board. For details, refer to the `setls` command in the *Sun Fire Midrange System Controller Command Reference Manual*. Disabling the component location for the board prevents the board from being configured into the domain when the domain is rebooted.

▼ To Hot-Swap a CPU/Memory Board Using DR

1. **Use DR to unconfigure and disconnect the CPU/Memory board out of the domain.**

   Refer to the *Sun Fire Midrange Systems Dynamic Reconfiguration User Guide*.

2. **Verify the state of the LEDs on the board.**

   Refer to the CPU/Memory board chapter of the *Sun Fire 6800/4810/4800/3800 Systems Service Manual* or the *Sun Fire E6900/E4900 Systems Service Manual.*

3. **Remove and replace the board.**

   Refer to the CPU/Memory board chapter of the *Sun Fire 6800/4810/4800/3800 Systems Service Manual* or the *Sun Fire E6900/E4900 Systems Service Manual.*

4. **Power on the board:**

   ```
   schostname:SC> poweron board_name
   ```

   where *board_name* is `sb0–sb5` or `ib6–ib9`.

5. **Check the version of the firmware that is installed on the board by using the `showboards` command:**

   ```
   schostname:SC> showboards -p version
   ```

   The firmware version of the new replacement board must be compatible with the system controller firmware.

6. **If the firmware version of the replacement board or assembly is not compatible with the SC firmware, use the `flashupdate -c` command to update the firmware from another board in the current domain.**

   ```
   schostname:SC> flashupdate -c source_board destination_board
   ```

   For a description of command syntax, refer to the `flashupdate` command in the *Sun Fire Midrange System Controller Command Reference Manual*.

7. **Use DR to connect and configure the board back into the domain.**

   Refer to the *Sun Fire Midrange Systems Dynamic Reconfiguration User Guide.*

8. **Verify the state of the LEDs on the board.**

   Refer to the CPU/Memory board chapter of the *Sun Fire 6800/4810/4800/3800 Systems Service Manual* or the *Sun Fire E6900/E4900 Systems Service Manual*.

▼ To Hot-Swap an I/O Assembly Using DR

The following procedure describes how to hot-swap an I/O assembly and test it in a spare domain that is not running the Solaris operating environment.

1. **Use DR to unconfigure and disconnect the I/O assembly out of the domain.**

   Refer to the *Sun Fire Midrange Systems Dynamic Reconfiguration User Guide*

2. **Verify the state of the LEDs on the assembly.**

   Refer to the I/O assembly chapter of the *Sun Fire 6800/4810/4800/3800 Systems Service Manual* or the *Sun Fire E6900/E4900 Systems Service Manual.*

3. **Remove and replace the assembly.**

   Refer to the I/O assembly chapter of the *Sun Fire 6800/4810/4800/3800 Systems Service Manual* or the *Sun Fire E6900/E4900 Systems Service Manual*.

4. **Power on the board:**

```
schostname:SC> poweron board_name
```

5. **Check the version of the firmware that is installed on the assembly by using the `showboards` command:**

```
schostname:SC> showboards -p version
```

   The firmware version of the new replacement board must be compatible with the system controller firmware.

6. **If the firmware version of the replacement board or assembly is not compatible with the SC firmware, use the `flashupdate -c` command to update the firmware from another board in the current domain:**

```
schostname:SC> flashupdate -c source_board destination_board
```

   For details on the `flashupdate` command syntax, refer to the command description in the *Sun Fire Midrange System Controller Command Reference Manual*.

7. **Before you bring the board back to the Solaris operating environment, test the I/O assembly in a spare domain that contains at least one CPU/Memory board with a minimum of one CPU.**

   a. **Enter a spare domain.**

b. **Test the I/O assembly.**

For details, see "Testing an I/O Assembly" on page 142.

8. **Use DR to connect and configure the assembly back into the domain running the Solaris operating environment.**

Refer to the *Sun Fire Midrange Systems Dynamic Reconfiguration User Guide*.

CompactPCI and PCI Cards

If you need to remove and replace a CompactPCI or PCI card, use the procedures that follow. These procedures do not involve DR commands. For additional information on replacing CompactPCI and PCI cards, refer to the *Sun Fire 6800/4810/4800/3800 Systems Service Manual* or the *Sun Fire E6900/E4900 Systems Service Manual*.

▼ To Remove and Replace a PCI Card

1. **Halt the Solaris operating environment in the domain, power off the I/O assembly, and remove it from the system.**

Complete Step 1 and Step 2 in "To Remove and Replace a System Board" on page 148.

2. **Remove and replace the card.**

Refer to the *Sun Fire 6800/4810/4800/3800 Systems Service Manual* or the *Sun Fire E6900/E4900 Systems Service Manual*.

3. **Replace the I/O assembly and power it on.**

Complete Step 3 and Step 4 in "To Remove and Replace a System Board" on page 148.

4. **Reconfigure booting of the Solaris operating environment in the domain.**

At the `ok` prompt, type `boot -r`.

```
ok boot -r
```

▼ To Remove and Replace a CompactPCI Card

1. **Halt the Solaris operating environment in the domain, power off the I/O assembly, and remove it from the system.**

   Complete Step 1 and Step 2 in "To Remove and Replace a System Board" on page 148.

2. **Remove and replace the CompactPCI card from the I/O assembly.**

   For details, refer to the *Sun Fire 6800/4810/4800/3800 Systems Service Manual* or the *Sun Fire E6900/E4900 Systems Service Manual.*

3. **Reconfigure booting of the Solaris operating environment in the domain.**

   At the `ok` prompt, type `boot -r`.

```
ok boot -r
```

Repeater Boards

This section discusses the firmware steps necessary to remove and replace a Repeater board. Only the Sun Fire E6900/E4900/6800/4810/4800 systems have Repeater boards. The Sun Fire 3800 system has the equivalent of two Repeater boards on the active centerplane.

▼ To Remove and Replace a Repeater Board

1. **Determine which domains are active by typing the `showplatform -p status` system controller command from the platform shell.**

2. **Determine which Repeater boards are connected to each domain (TABLE 11-1).**

TABLE 11-1 Repeater Boards and Domains

System	Partition Mode	Repeater Board Names	Domain IDs
Sun Fire E6900 and 6800 systems	Single partition	RP0, RP1, RP2, RP3	A, B
Sun Fire E6900 and 6800 systems	Dual partition	RP0, RP1	A, B
Sun Fire E6900 and 6800 systems	Dual partition	RP2, RP3	C, D
Sun Fire 4810 system	Single partition	RP0, RP2	A, B
Sun Fire 4810 system	Dual partition	RP0	A
Sun Fire 4810 system	Dual partition	RP2	C
Sun Fire E4900 and 4800 systems	Single partition	RP0, RP2	A, B
Sun Fire E4900 and 4800 systems	Dual partition	RP0	A
Sun Fire E4900 and 4800 systems	Dual partition	RP2	C
Sun Fire 3800 system	Equivalent of two Repeater boards integrated into the active centerplane.		

3. **Complete the steps to**
   - Halt the Solaris operating environment in each domain the Repeater board is connected to.
   - Power off each domain.

   Complete Step 1 through Step 3 in "To Power Off the System" on page 64.

4. **Power off the Repeater board with the `poweroff` command.**

```
schostname:SC> poweroff board_name
```

   where *board_name* is the name of the Repeater board (`rp0`, `rp1`, `rp2`, or `rp3`).

5. **Verify that the green power LED ( ) is off.**

Caution – Be sure you are properly grounded before you remove and replace the Repeater board.

6. **Remove and replace the Repeater board.**

   Refer to the *Sun Fire 6800/4810/4800/3800 Systems Service Manual* and the *Sun Fire E6900/E4900 Systems Service Manual.*

7. **Boot each domain using the boot procedure described in** **"To Power On the System" on page 65****.**

System Controller Board

This section discusses how to remove and replace a System Controller board.

▼ To Remove and Replace the System Controller Board in a Single SC Configuration

---

Note – This procedure assumes that your system controller has failed and that there is no spare system controller.

---

1. **For each active domain, use an SSH or Telnet session to access the domain (see Chapter 2 for details), and halt the Solaris operating environment in the domain.**

Caution – Because you do not have access to the console, you will not be able to determine when the operating environment is completely halted. Wait until you can best judge that the operating environment has halted.

---

2. **Turn off the system completely.**

Caution – Be sure to power off the circuit breakers and the power supply switches for the Sun Fire 3800 system. Make sure you power off all the hardware components to the system.

   Refer to the "Powering Off and On" chapter in the *Sun Fire 6800/4810/4800/3800 Systems Service Manual* or the *Sun Fire E6900/E4900 Systems Service Manual*.

3. **Remove the defective System Controller board and replace the new System Controller board.**

   Refer to the "System Controller Board" chapter in the *Sun Fire 6800/4810/4800/3800 Systems Service Manual* or the *Sun Fire E6900/E4900 Systems Service Manual*.

4. **Check the firmware version of the new replacement board by using the `showsc` command:**

```
schostname:SC> showsc
```

The firmware version of the new System Controller board must be compatible with other components in the system. If the firmware version is not compatible, use the `flashupdate` command to upgrade or downgrade the firmware on the new system controller board. Refer to the `Install.info` file for instructions on upgrading or downgrading system controller firmware.

5. **Power on the redundant transfer units (RTUs), AC input boxes, and the power supply switches.**

Refer to the "Powering Off and On" chapter in the *Sun Fire 6800/4810/4800/3800 Systems Service Manual* or the *Sun Fire E6900/E4900 Systems Service Manual.* When the specified hardware is powered on, the System Controller board will automatically power on.

6. **Do one of the following:**

- If you previously saved the platform and domain configurations by using the `dumpconfig` command, use the `restoreconfig` command to restore the platform and domain configurations from a server.

  You must have saved the latest platform and domain configurations of your system with the `dumpconfig` command in order to restore the latest platform and domain configurations with the `restoreconfig` command. For command syntax and examples, see the `restoreconfig` command in the *Sun Fire Midrange System Controller Command Reference Manual*.

- If you did not type the `dumpconfig` command earlier, configure the system again. See Chapter 3.

Note – When you insert a new System Controller board into the system, it is set to the default values of the `setupplatform` command. It is set to DHCP, which means the system controller will use DHCP to get to its network settings.

If DHCP is not available (there is a 120-second timeout waiting period), then the System Controller board will boot and the network (`setupplatform -p net`) will need to be configured before you can type the `restoreconfig` command.

---

7. **Check the date and time for the platform and each domain.**

Type the `showdate` command in the platform shell and in each domain shell.

If you need to reset the date or time, go to Step 8. Otherwise, skip to Step 9.

8. **Set the date and time for the platform and for each domain (if needed).**

a. **Set the date and time for the platform shell.**

   See the `setdate` command in the *Sun Fire Midrange System Controller Command Reference Manual*.

b. **Set the date for each domain shell.**

9. **Check the configuration for the platform by typing `showplatform` at the platform shell. If necessary, run the `setupplatform` command to configure the platform.**

   See "To Configure Platform Parameters" on page 49.

10. **Check the configuration for each domain by typing `showdomain` in each domain shell. If necessary, run the `setupdomain` command to configure each domain.**

    See "To Configure Domain-Specific Parameters" on page 51.

11. **Boot the Solaris operating environment in each domain you want powered on.**

12. **Complete Step 4 and Step 5 in "To Power On the System" on page 65.**

▼ To Remove and Replace a System Controller Board in a Redundant SC Configuration

---

Note – When you replace a pair of System Controller boards with SC V2s (enhanced-memory SCs), replace the spare SC first, perform a manual failover, and then replace the other SC as described in the steps below. Mixed SC versions are not supported, except during the brief period in which the main and spare SCs are upgraded to SC V2s.

---

1. **Run the `showsc` or `showfailover -v` command to determine which system controller (SC) is the main.**

2. **If the working SC (the one that is not to be replaced) is not the main, perform a manual failover:**

```
schostname:sc> setfailover force
```

The working system controller becomes the main SC.

3. **Power off the system controller to be replaced:**

```
schostname:SC> poweroff component_name
```

where *component_name* is the name of the System Controller board to be replaced, either SSC0 or SSC1.

The System Controller board is powered off, and the hot-plug LED is illuminated. A message indicates when you can safely remove the system controller.

4. **Remove the System Controller board to be replaced and insert the new System Controller board.**

The new System Controller board powers on automatically.

5. **Verify that the firmware on the new system controller matches the firmware on the working SC.**

You can use the `showsc` command to check the firmware version (the ScApp version) running on the system controller. If the firmware versions do not match, use the `flashupdate` command to upgrade or downgrade the firmware on the new system controller so that it matches the firmware version of the other SC. Refer to the `Install.info` file for details.

6. **Re-enable SC failover by running the following command on the main or spare SC:**

```
schostname:SC> setfailover on
```

ID Board and Centerplane

This section explains how to remove and replace an ID board and centerplane.

▼ To Remove and Replace an ID Board and Centerplane

1. **Before you begin, be sure to have a terminal connected to the serial port of the system controller and have the following information available (it will be used later in this procedure):**

- System serial number
- Model number

- MAC address (for domain A)
- Host ID (for domain A)
- Whether you have a Capacity on Demand system

You can find information on labels affixed to the system. Refer to the *Sun Fire 6800/4810/4800/3800 Systems Service Manual* or the *Sun Fire E6900/E4900 Systems Service Manual* for more information on label placement.

In most cases, when only the ID board and centerplane are replaced, the original System Controller board will be used. The above information was already cached by the system controller and will be used to program the replacement ID board. You will be asked to confirm the above information.

2. **Complete the steps to remove and replace the centerplane and ID board.**

   Refer to the "Centerplane and ID Boards" chapter of the *Sun Fire 6800/4810/4800/3800 Systems Service Manual* or the *Sun Fire E6900/E4900 Systems Service Manual*.

Note – The ID board can be written only once. Exercise care to manage this replacement process carefully. Any errors may require a new ID board.

---

3. **After removing and replacing the ID board, make every attempt to use the original System Controller board installed in slot ssc0 in this system.**

   Using the same System Controller board allows the system controller to automatically prompt with the correct information.

4. **Power on the hardware components.**

   Refer to the "Power Off and On" chapter of th*e Sun Fire 6800/4810/4800/3800 Systems Service Manual* or the *Sun Fire E6900/E4900 Systems Service Manual*.

   The system controller boots automatically.

5. **If you have a serial port connection, access the console for the system controller because the system will prompt you to confirm the board ID information (**CODE EXAMPLE 11-1**).**

   The prompting will not occur with a remote connection (`SSH` or `telnet`).

CODE EXAMPLE 11-1 Confirming Board ID Information

```
It appears that the ID Board has been replaced.
Please confirm the ID information:
(Model, System Serial Number, Mac Address Domain A, HostID Domain A, COD Status)
Sun Fire 4800, 45H353F, 08:00:20:d8:a7:dd, 80d8a7dd, non-COD
Is the information above correct? (yes/no):
```

If you have a new System Controller board, skip Step 6 and go to Step 7.

6. **Compare the information collected in Step 1 with the information you have been prompted with in Step 5.**
   - If the information matches, answer `yes` to the above question on the system controller console. The system will boot normally.
   - If the information does not match, answer `no` to the above question on the system controller console.
7. **If you answer `no` to the question in Step 6 *or* if you are replacing both the ID board and the System Controller board at the same time, you will be prompted to enter the ID information manually.**

Note – Enter this information carefully, as you have only one opportunity to do so. Use the information collected in Step 1 to answer the questions prompted for in CODE EXAMPLE 11-2. Be aware that you must specify the MAC address and Host ID of domain A (not the SC).

CODE EXAMPLE 11-2 ID Information to Enter Manually

```
Please enter System Serial Number: xxxxxxxx
Please enter the model number (3800/4800/4810/6800/E4900/E6900): xxx
MAC address for Domain A: xx:xx:xx:xx:xx:xx
Host ID for Domain A: xxxxxxxx
Is COD (Capacity on Demand) system ? (yes/no): xx
Programming Replacement ID Board
Caching ID information
```

8. **Complete Step 3 and Step 4 in "To Power On the System" on page 65.**

CHAPTER 12

Troubleshooting

An internal fault is any condition that is considered to be unacceptable for normal system operation. When the system has a fault, the Fault LED ( ) will turn on. When domains encounter hardware errors, the auto-diagnosis and auto-restoration features will detect, diagnose, and attempt to deconfigure components associated with hardware errors (see "Automatic Diagnosis and Recovery Overview" on page 99 for details). However, further troubleshooting by the system administrator may be necessary when there are other system problems or error conditions that are not handled by the auto-diagnosis engine.

This chapter provides general guidelines for troubleshooting system problems and covers the following topics:

- "Capturing and Collecting System Information" on page 163
- "Domain Not Responding" on page 168
- "Board and Component Failures" on page 169

Capturing and Collecting System Information

To analyze a system failure or to assist your Sun service provider in determining the cause of a system failure, gather information from the following sources:

- Platform, Domain, and System Messages
- Platform and Domain Status Information From System Controller Commands
- Diagnostic and System Configuration Information From Solaris Operating Environment Commands

Platform, Domain, and System Messages

TABLE 12-1 identifies different ways to capture error messages and other system information displayed on the platform or console.

TABLE 12-1 Capturing Error Messages and Other System Information

Error Logging System	Definition
`/var/adm/messages`	File in the Solaris operating environment containing messages that are reported by the Solaris operating environment as determined by `syslog.conf`. This file does not contain any system controller or domain console messages. **Note:** Messages diverted to external `syslog` hosts can be found in the `/var/adm/messages` file of the syslog host.
Platform console	Contains and displays system controller error and event messages.
Domain console	Contains and displays: • Messages written to the domain console by the Solaris operating environment • System controller error and event messages **Note:** System controller messages that relate to a domain are reported to the domain console only and are not reported to the Solaris operating environment.
`loghost`	Used to collect system controller messages. You must set up a `syslog` loghost for the platform shell and for each domain shell, to capture platform and domain console output. To permanently save loghost error messages, you must set up a loghost server. For details on setting up the loghost for the platform and domains, see TABLE 3-1. The system controller log files are necessary because they contain more information than the `showlogs` system controller command. Also, with the system controller log files, your service provider can obtain a persistent, stored history of the system, which can help during troubleshooting.

TABLE 12-1 Capturing Error Messages and Other System Information *(Continued)*

Error Logging System	Definition
`showlogs`	System controller command that displays system controller messages for the platform and domain that are stored in a dynamic buffer. Once the buffer is filled, the old messages are overwritten. The message buffer is cleared under these conditions: • When you reboot the system controller • When the system controller loses power However, in systems with enhanced-memory SCs (SC V2s), certain log messages are maintained in persistent storage. These logs persist even after the system is rebooted or the system loses power. The showboards -p command enables you to view specific persistent logs.
`showerrorbuffer`	System controller command that displays system error information stored in the system error buffer. The output provides details about the error, such as a fault condition. You and your service provider can review this information to analyze a failure or problem. The first error entry in the buffer is retained for diagnostic purposes. However, once the buffer becomes full, subsequent error messages cannot be stored and are discarded. The error buffer must be cleared by your service provider after the error condition is resolved. In systems with enhanced-memory SCs (SC V2s), these system error messages are retained in persistent storage. These system error messages persist even after the SC is rebooted or the SC loses power.
`showfru`	System controller command that displays the field-replaceable unit (FRUs) installed in a Sun Fire midrange system. Your service provider uses this information to track the FRUs in a system.

Platform and Domain Status Information From System Controller Commands

TABLE 12-2 identifies system controller commands that provide platform and domain status information that can be used for troubleshooting purposes.

TABLE 12-2 System Controller Commands that Display Platform and Domain Status Information

Command	Platform	Domain	Description
`showboards -v`	x	x	Displays the assignment information and status for all the components in the system.
`showenvironment`	x	x	Displays the current environmental status, temperatures, currents, voltages, and fan status for the platform or the domain.
`showdomain -v`		x	Displays the domain configuration parameters.
`showerrorbuffer`	x		Shows the contents of the system errors in the system error buffer.
`showfru -r manr`	x		Displays the manufacturing records of FRUs installed in a Sun Fire midrange system.
`showlogs -v` or `showlogs -v d` *domainID*	x	x	Displays the system controller-logged events stored in the dynamic buffer.
`showlogs -p f` *filter*	x	x	For systems with SC V2s, displays the system controller-logged messages recorded in persistent storage.
`showplatform -v` or `showplatform -d` *domainID*	x		Shows the configuration parameters for the platform and specific domain information.
`showresetstate -v` or `showresetstate -v -f URL`		x	Prints a summary report of the contents of registers from every CPU in the domain that has a valid saved state. If you specify the `-f` *URL* option with the `showresetstate` command, the report summary is written to a URL, which can be reviewed by your service provider.
`showsc -v`	x		Shows the system controller and clock failover status, ScApp and RTOS versions, and uptime.

For additional information on these commands, refer to their command descriptions in the *Sun Fire Midrange System Controller Command Reference Manual*.

Diagnostic and System Configuration Information From Solaris Operating Environment Commands

You can obtain diagnostic and system configuration information through the Solaris operating environment, with the following commands:

- `prtconf` command

  The `prtconf` command prints the system configuration information. The output includes:

  - Total amount of memory
  - Configuration of the system peripherals formatted as a device tree

  This command has many options. For command syntax, options, and examples, see the `prtconf`(1M) man page in your Solaris operating environment release.

- `prtdiag` command

  The `prtdiag` command displays the following information to the domain of your Sun Fire midrange system:

  - Configuration
  - Diagnostic (any failed FRUs)
  - Total amount of memory

  For more information on this command, see the `prtdiag` (1M) man page in your Solaris operating environment release.

- `sysdef` command

  The Solaris operating environment `sysdef` utility outputs the current system definition in tabular form. It lists:

  - All hardware devices
  - Pseudo devices
  - System devices
  - Loadable modules
  - Values of selected kernel tunable parameters

  This command generates the output by analyzing the named bootable operating system file (*namelist*) and extracting configuration information from it. The default system *namelist* is `/dev/kmem`.

  For command syntax, options, and examples, see the `sysdef`(1M) man page in your Solaris operating environment release.

- `format` command

  The Solaris operating environment utility `format`, which is used to format drives, can also be used to display both logical and physical device names. For command syntax, options, and examples, see the `format`(1M) man page in your Solaris operating environment release.

Domain Not Responding

If a domain is not responding, the domain is most likely in one of the following states:

- Paused due to a hardware error

  If the system controller detects a hardware error, and the `reboot-on-error` parameter in the `setupdomain` command is set to `true`, the domain is automatically rebooted after the auto-diagnosis engine reports and deconfigures components associated with the hardware error.

  However, if the `reboot-on-error` parameter is set to false, the domain is paused. If the domain is paused, reset the domain by turning the domain off with the `setkeyswitch off` command and then turning the domain on with the `setkeyswitch on` command.

- Hung

  A domain can be hung because

  - The domain heartbeat stops.
  - The domain does not respond to interrupts.

  In such cases, the system controller automatically performs an XIR and reboots the domain, provided that the `hang-policy` parameter of the `setupdomain` command is set to `reset`.

  However, if the domain hangs and the `hang-policy` parameter of the `setupdomain` command is set to `notify`, the system controller reports that the domain is hung but does not automatically recover the domain. In this case, you must recover the hung domain as explained in the following procedure.

  A domain is considered to be hard hung when the Solaris operating environment and OpenBoot PROM (OBP) are not responding at the domain console.

▼ To Recover From a Hung Domain

Note – This procedure assumes that the system controller is functioning and that the `hang-policy` parameter of the `setupdomain` command is set to `notify`.

---

1. **Determine the status for the domain as reported by the system controller.**

   Type *one* of the following system controller commands:

   - `showplatform -p status` (platform shell)

- `showdomain -p status` (domain shell)

These commands provide the same type of information in the same format. If the output in the `Domain Status` field displays `Not Responding`, the system controller has determined that the domain is hung.

2. **Reset the domain:**

Note – A domain cannot be reset while the domain keyswitch is in the secure position.

---

a. **Access the domain shell.**

   See "System Controller Navigation" on page 36.

b. **Reset the domain by typing the `reset` command.**

   In order for the system controller to perform this operation, you must confirm it. For a complete definition of this command, refer to the `reset` command in the *Sun Fire Midrange System Controller Command Reference Manual*.

   The manner in which the domain recovery occurs is determined by the `OBP.error-reset-recovery` parameter settings in the `setupdomain` command. For details on the domain parameters, refer to the `setupdomain` command in the *Sun Fire Midrange System Controller Command Reference Manual*.

Board and Component Failures

The auto-diagnosis engine can diagnose and identify certain types of components, such as CPU/Memory boards and I/O assemblies, associated with hardware failures. However, other components, such as the System Controller boards, Repeater boards, power supplies, and fan trays are not handled by the auto-diagnosis engine.

Handling Component Failures

This section describes what to do when the following components fail:

- CPU/Memory boards
- I/O assemblies
- Repeater boards
- System Controller boards
- Power supplies
- Fan trays

For additional information about these components, refer to the *Sun Fire 6800/4810/4800/3800 Systems Service Manual* or the *Sun Fire E6900/E4900 Systems Service Manual*.

▼ To Handle Failed Components

1. **Capture and collect system information for troubleshooting purposes.**
   - CPU/Memory board failure – Collect auto-diagnosis event messages from the sources described in TABLE 12-1.
   - I/O assembly failure – Collect auto-diagnosis event messages from the sources described in TABLE 12-1.
   - Repeater board failure – Collect troubleshooting data as described in TABLE 12-1 and TABLE 12-2 and temporarily adjust available domain resources. See "Recovering from a Repeater Board Failure" on page 170.
   - System controller board failure:
     - In a redundant SC configuration, wait for automatic SC failover to occur. After the failover, review the `showlogs` command output, the platform loghost, if configured, and platform messages for the working SC to obtain information on the failure condition.
     - If you have one SC and it fails, collect data from the platform and domain console or loghosts, and output from the `showlogs` and `showerrorbuffer` commands.
   - Power supply failure – If you have do not have a redundant power supply, collect troubleshooting data as described in TABLE 12-1 and TABLE 12-2.
   - Fan tray failure – If you have do not have a redundant fan tray, collect troubleshooting data as described in TABLE 12-1 and TABLE 12-2.
2. **Contact your service provider for further assistance.**

   Your service provider will review the troubleshooting data that you gathered and will initiate the appropriate service action.

Recovering from a Repeater Board Failure

If a Repeater board failure occurs, you can use remaining domain resources until the failed board can be replaced. You must set the partition mode parameter (of the `setupplatform` command) to dual-partition mode and adjust the domain resources to use available domains, as indicated in TABLE 12-3.

TABLE 12-3 Adjusting Domain Resources When a Repeater Board Fails

Midrange Server	RP0 Failure	RP1 Failure	RP2 Failure	RP3 Failure	Use Available Domains
Sun Fire E6900 and 6800	X				C and D
		X			C and D
			X		A and B
				X	A and B
Sun Fire E4900/4810/ 4800/3800 systems	X	Not applicable		Not applicable	C
		Not applicable	X	Not applicable	A

If you are running host-licensed software on a domain affected by a Repeater board failure, you can also swap the HostID/MAC address of the affected domain with that of an available domain. You can then use the hardware of the available domain to run the host-licensed software without encountering license restrictions. Use the `HostID/MAC Address Swap` parameter in the `setupplatform` command to swap the HostID/MAC address between a pair of domains. For details, see "Swapping Domain HostID/MAC Addresses" on page 74.

APPENDIX **A**

Mapping Device Path Names

This appendix describes how to map device path names to physical system devices. It describes the following topics:

- "CPU/Memory Mapping" on page 173
- "I/O Assembly Mapping" on page 175

Device Mapping

The physical address represents a physical characteristic that is unique to the device. Examples of physical addresses include the bus address and the slot number. The slot number indicates where the device is installed.

You reference a physical device by the node identifier—agent ID (AID). The AID ranges from 0 to 31 in decimal notation (0 to 1f in hexadecimal). In the device path beginning with `ssm@0,0` the first number, 0, is the node ID.

CPU/Memory Mapping

CPU/Memory board and memory agent IDs (AIDs) range from 0 to 23 in decimal notation (0 to 17 in hexadecimal). Depending on the platform type, a system can have up to six CPU/Memory boards.

Each CPU/Memory board can have either two or four CPUs, depending on your configuration. Each CPU/Memory board has up to four banks of memory. Each bank of memory is controlled by one memory management unit (MMU), which is the CPU. The following code example shows a device tree entry for a CPU and its associated memory:

```
/ssm@0,0/SUNW/UltraSPARC-III@b,0 /ssm@0,0/SUNW/memory-controller@b,400000
```

where:

in `b,0`

- `b` is the CPU agent identifier (AID)
- 0 is the CPU register

in `b,400000`

- `b` is the memory agent identifier (AID)
- 400000 is the memory controller register

There are up to four CPUs on each CPU/Memory board (TABLE A-1):

- CPUs with AIDs 0–3 reside on board name SB0.
- CPUs with AIDs 4–7 on board name SB1.
- CPUs with AIDs 8–11 on board name SB2, and so on.

TABLE A-1 CPU and Memory Agent ID Assignment

CPU/Memory Board Name	Agent IDs on Each CPU/Memory Board			
	CPU 0	CPU 1	CPU 2	CPU 3
SB0	0 (0)	1 (1)	2 (2)	3 (3)
SB1	4 (4)	5 (5)	6 (6)	7 (7)
SB2	8 (8)	9 (9)	10 (a)	11 (b)
SB3	12 (c)	13 (d)	14 (e)	15 (f)
SB4	16 (10)	17 (11)	18 (12)	19 (13)
SB5	20 (14)	21 (15)	22 (16)	23 (17)

The first number in the columns of agent IDs is a decimal number. The number or letter in parentheses is in hexadecimal notation.

I/O Assembly Mapping

TABLE A-2 lists the types of I/O assemblies, the number of slots each I/O assembly has, and the systems the I/O assembly types are supported on.

TABLE A-2 I/O Assembly Type and Number of Slots per I/O Assembly by System Type

I/O Assembly Type	Number of Slots Per I/O Assembly	System Name(s)
PCI	8	Sun Fire E6900/E4900/6800/4810/4800 systems
CompactPCI	6	Sun Fire 3800 system
CompactPCI	4	Sun FireE6900/E4900/6800/4810/4800 systems

TABLE A-3 lists the number of I/O assemblies per system and the I/O assembly name.

TABLE A-3 Number and Name of I/O Assemblies per System

System Name(s)	Number of I/O Assemblies	I/O Assembly Name
Sun Fire E6900 and 6800 systems	4	IB6–IB9
Sun Fire 4810 system	2	IB6 and IB8
Sun Fire E4900 and 4800 systems	2	IB6 and IB8
Sun Fire 3800 system	2	IB6 and IB8

Each I/O assembly hosts two I/O controllers:

- I/O controller 0
- I/O controller 1

When mapping the I/O device tree entry to a physical component in the system, you must consider up to five nodes in the device tree:

- Node identifier (ID)
- ID controller agent ID (AID)
- Bus offset
- PCI or CompactPCI slot
- Device instance

TABLE A-4 lists the AIDs for the two I/O controllers in each I/O assembly.

TABLE A-4 I/O Controller Agent ID Assignments

Slot Number	I/O Assembly Name	Even I/O Controller AID	Odd I/O Controller AID
6	IB6	24 (18)	25 (19)
7	IB7	26 (1a)	27 (1b)
8	IB8	28 (1c)	29 (1d)
9	IB9	30 (1e)	31 (1f)

The first number in the column is a decimal number. The number (or a number and letter combination) in parentheses is in hexadecimal notation.

Each I/O controller has two bus sides: A and B.

- Bus A, which is 66 MHz, is referenced by offset 600000.
- Bus B, which is 33 MHz, is referenced by offset 700000.

The board slots located in the I/O assembly are referenced by the device number.

PCI I/O Assembly

This section describes the PCI I/O assembly slot assignments and provides an example of the device path.

The following code example gives a breakdown of a device tree entry for a SCSI disk:

```
/ssm@0,0/pci@19,700000/pci@3/SUNW,isptwo@4/sd@5,0
```

Note – The numbers in the device path are hexadecimal.

where:

in `19,700000`

- 19 is the I/O controller agent identifier (AID).
- 700000 is the bus offset.

in `pci@3`

- 3 is the device number.

`isptwo` is the SCSI host adapter.

in `sd@5,0`

- 5 is the SCSI target number for the disk.
- 0 is the logical unit number (LUN) of the target disk.

This section describes the PCI I/O assembly slot assignments and provides an example of the device path.

TABLE A-5 lists, in hexadecimal notation, the slot number, I/O assembly name, device path of each I/O assembly, the I/O controller number, and the bus.

TABLE A-5 8-Slot PCI I/O Assembly Device Map for the Sun Fire Midrange Systems

I/O Assembly Name	Device Path	Physical Slot Number	I/O Controller Number	Bus
IB6	/ssm@0,0/pci@18,700000/pci@1	0	0	B
	/ssm@0,0/pci@18,700000/pci@2	1	0	B
	/ssm@0,0/pci@18,700000/pci@3	2	0	B
	/ssm@0,0/pci@18,600000/pci@1	3	0	A
	/ssm@0,0/pci@19,700000/pci@1	4	1	B
	/ssm@0,0/pci@19,700000/pci@2	5	1	B
	/ssm@0,0/pci@19,700000/pci@3	6	1	B
	/ssm@0,0/pci@19,600000/pci@1	7	1	A
IB7	/ssm@0,0/pci@1a,700000/pci@1	0	0	B
	/ssm@0,0/pci@1a,700000/pci@2	1	0	B
	/ssm@0,0/pci@1a,700000/pci@3	2	0	B
	/ssm@0,0/pci@1a,600000/pci@1	3	0	A
	/ssm@0,0/pci@1b,700000/pci@1	4	1	B
	/ssm@0,0/pci@1b,700000/pci@2	5	1	B
	/ssm@0,0/pci@1b,700000/pci@3	6	1	B
	/ssm@0,0/pci@1b,600000/pci@1	7	1	A
IB8	/ssm@0,0/pci@1c,700000/pci@1	0	0	B
	/ssm@0,0/pci@1c,700000/pci@2	1	0	B
	/ssm@0,0/pci@1c,700000/pci@3	2	0	B
	/ssm@0,0/pci@1c,600000/pci@1	3	0	A
	/ssm@0,0/pci@1d,700000/pci@1	4	1	B
	/ssm@0,0/pci@1d,700000/pci@2	5	1	B
	/ssm@0,0/pci@1d,700000/pci@3	6	1	B

TABLE A-5 8-Slot PCI I/O Assembly Device Map for the Sun Fire Midrange Systems

I/O Assembly Name	Device Path	Physical Slot Number	I/O Controller Number	Bus
	/ssm@0,0/pci@1d,600000/pci@1	7	1	A
IB9	/ssm@0,0/pci@1e,700000/pci@1	0	0	B
	/ssm@0,0/pci@1e,700000/pci@2	1	0	B
	/ssm@0,0/pci@1e,700000/pci@3	2	0	B
	/ssm@0,0/pci@1e,600000/pci@1	3	0	A
	/ssm@0,0/pci@1f,700000/pci@1	4	1	B
	/ssm@0,0/pci@1f,700000/pci@2	5	1	B
	/ssm@0,0/pci@1f,700000/pci@3	6	1	B
	/ssm@0,0/pci@1f,600000/pci@1	7	1	A

In TABLE A-5, note the following:

- `600000` is the bus offset and indicates bus A, which operates at 66 MHz.
- `700000` is the bus offset and indicates bus B, which operates at 33 MHz.
- `pci@3` is the device number. In this example, `@3` means it is the third device on the bus.

FIGURE A-1 illustrates the Sun Fire E6900 and 6800 PCI I/O assembly physical slot designations for I/O assemblies IB6 through IB9.

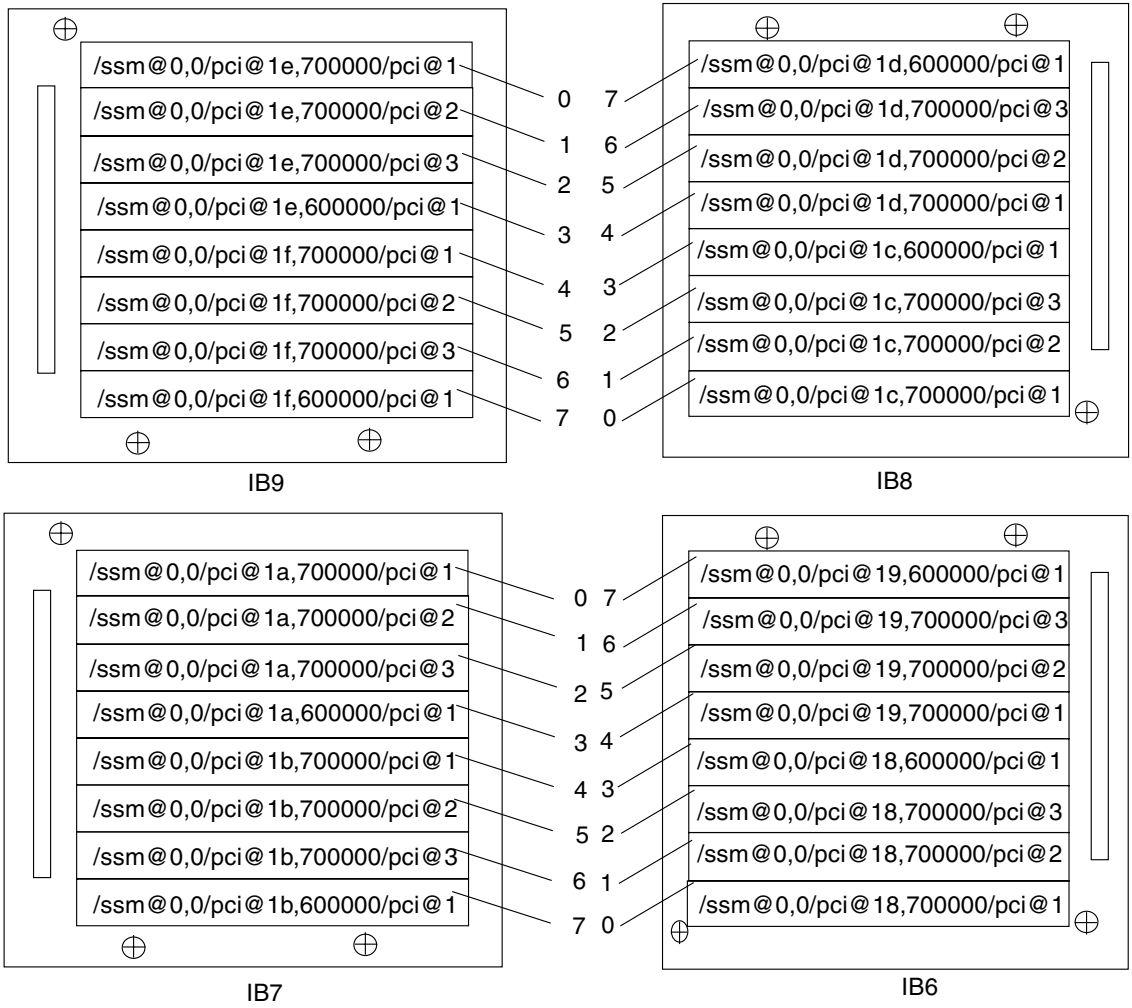

Note: Slots 0 and 1 of IB6 through IB9 are short slots.

FIGURE A-1 Sun Fire E6900 and 6800 PCI Physical Slot Designations for IB6 Through IB9

FIGURE A-2 illustrates the comparable information for Sun Fire E4900/4810/4800/3800 systems.

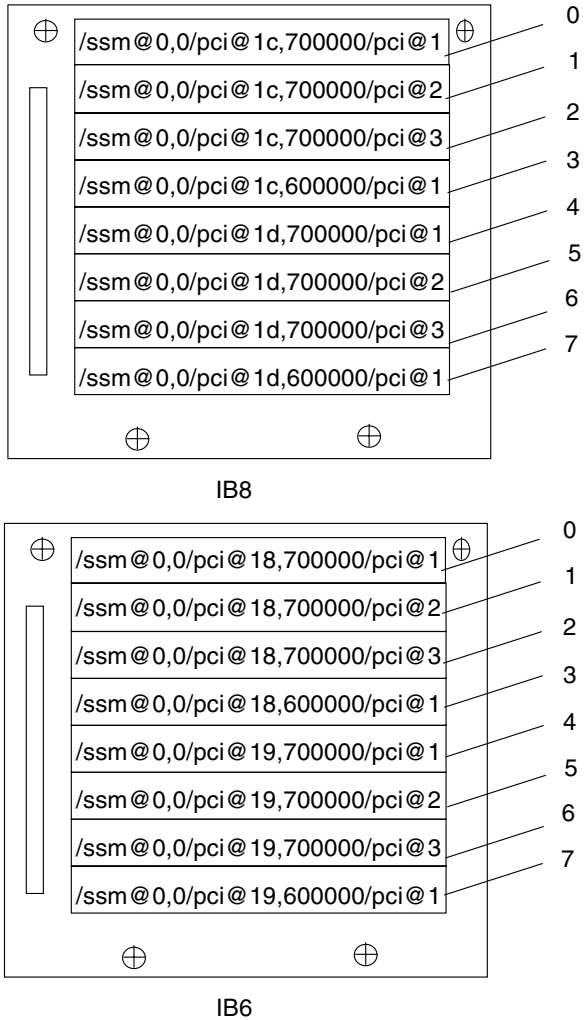

Note: Slots 0 and 1 for IB6 and IB 8 are short slots.

FIGURE A-2 Sun Fire E4900/4810/4800 Systems PCI Physical Slot Designations for IB6 and IB8

CompactPCI I/O Assembly

This section describes the CompactPCI I/O assembly slot assignments and provides an example on the six-slot I/O assembly device paths.

▼ To Determine an I/O Physical Slot Number Using an I/O Device Path

1. **Use** TABLE A-6 **for Sun Fire 3800 systems or to determine the:**
   - I/O assembly based on the I/O controller AID address
   - Physical slot number based on the I/O assembly and the device path
2. **Use** FIGURE A-3 **to locate the slot based on I/O assembly and the physical slot number.**

CompactPCI I/O Assembly Slot Assignments

This code example is the breakdown of the device tree for the CompactPCI I/O assembly, `ib8`.

```
/ssm@0,0/pci@1c,700000/pci@1/SUNW,isptwo@4
```

where:

in `pci@1c,700000`

- `c` is the I/O controller AID.
- `700000` is the bus offset.

in `pci@1`

- `1` is the device number.

`isptwo` is the SCSI host adapter.

6-Slot CompactPCI I/O Assembly Device Map

TABLE A-6 lists, in hexadecimal notation, the slot number, I/O assembly name, device path of each I/O assembly, I/O controller number, and bus.

TABLE A-6 Mapping Device Path to I/O Assembly Slot Numbers for Sun Fire 3800 Systems

I/O Assembly Name	Device Path	Physical Slot Number	I/O Controller Number	Bus
IB6	/ssm@0,0/pci@19,700000/pci@2	5	1	B
	/ssm@0,0/pci@19,700000/pci@1	4	1	B
	/ssm@0,0/pci@18,700000/pci@2	3	0	B
	/ssm@0,0/pci@18,700000/pci@1	2	0	B
	/ssm@0,0/pci@19,600000/pci@1	1	1	A
	/ssm@0,0/pci@18,600000/pci@1	0	0	A
IB8	/ssm@0,0/pci@1d,700000/pci@2	5	1	B
	/ssm@0,0/pci@1d,700000/pci@1	4	1	B
	/ssm@0,0/pci@1c,700000/pci@2	3	0	B
	/ssm@0,0/pci@1c,700000/pci@1	2	0	B
	/ssm@0,0/pci@1d,600000/pci@1	1	1	A
	/ssm@0,0/pci@1c,600000/pci@1	0	0	A

In TABLE A-6, note the following:

- `600000` is the bus offset and indicates bus A, which operates at 66 MHz.
- `700000` is the bus offset and indicates bus B, which operates at 33 MHz.
- `pci@1` is the device number. The `@1` means it is the first device on the bus.

FIGURE A-3 illustrates the Sun Fire 3800 CompactPCI physical slot designations.

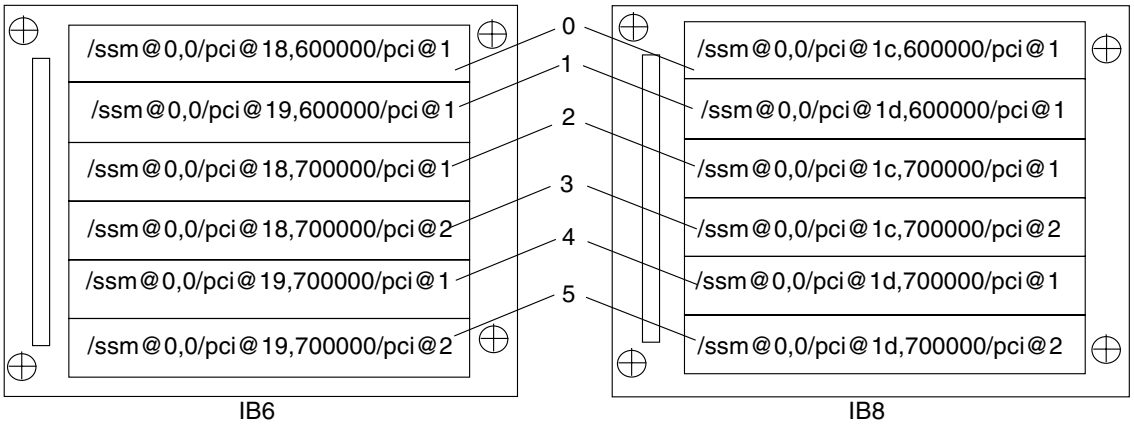

FIGURE A-3 Sun Fire 3800 System 6-Slot CompactPCI Physical Slot Designations

4-Slot CompactPCI I/O Assembly Device Map

TABLE A-7 lists, in hexadecimal notation, the slot number, I/O assembly name, device path of each I/O assembly, I/O controller number, and bus for Sun Fire E6900/E4900/6800/4810/4800 systems.

TABLE A-7 Mapping Device Path to I/O Assembly Slot Numbers for Sun Fire E6900/E4900/6800/4810/4800 Systems

I/O Assembly Name	Device Path	Physical Slot Number	I/O Controller Number	Bus
IB6	/ssm@0,0/pci@19,700000/pci@1	3	1	B
	/ssm@0,0/pci@18,700000/pci@1	2	0	B
	/ssm@0,0/pci@19,600000/pci@1	1	1	A
	/ssm@0,0/pci@18,600000/pci@1	0	0	A
IB7	/ssm@0,0/pci@1b,700000/pci@1	3	1	B
	/ssm@0,0/pci@1a,700000/pci@1	2	0	B
	/ssm@0,0/pci@1b,600000/pci@1	1	1	A
	/ssm@0,0/pci@1a,600000/pci@1	0	0	A
IB8	/ssm@0,0/pci@1d,700000/pci@1	3	1	B
	/ssm@0,0/pci@1c,700000/pci@1	2	0	B
	/ssm@0,0/pci@1d,600000/pci@1	1	1	A

TABLE A-7 Mapping Device Path to I/O Assembly Slot Numbers for Sun Fire E6900/E4900/6800/4810/4800 Systems *(Continued)*

I/O Assembly Name	Device Path	Physical Slot Number	I/O Controller Number	Bus
	/ssm@0,0/pci@1c,600000/pci@1	0	0	A
IB9	/ssm@0,0/pci@1f,700000/pci@1	3	1	B
	/ssm@0,0/pci@1e,700000/pci@1	2	0	B
	/ssm@0,0/pci@1f,600000/pci@1	1	1	A
	/ssm@0,0/pci@1e,600000/pci@1	0	0	A

In TABLE A-7 note the following:

- `600000` is the bus offset and indicates bus A, which operates at 66 MHz.
- `700000` is the bus offset and indicates bus B, which operates at 33 MHz.
- `pci@1` is the device number. The `@1` means it is the first device on the bus.

FIGURE A-4 illustrates the Sun Fire E4900/4810/4800 CompactPCI physical slot designations.

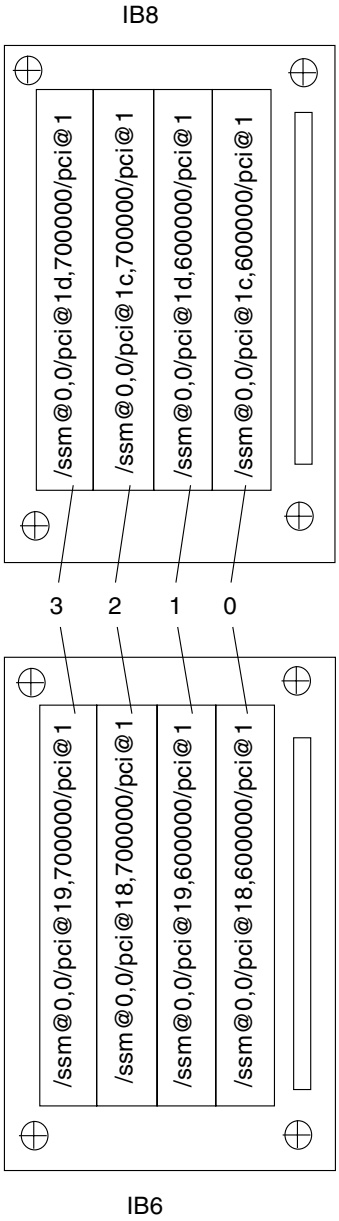

FIGURE A-4 Sun Fire E4900/4810/4800 Systems 4-Slot CompactPCI Physical Slot Designations

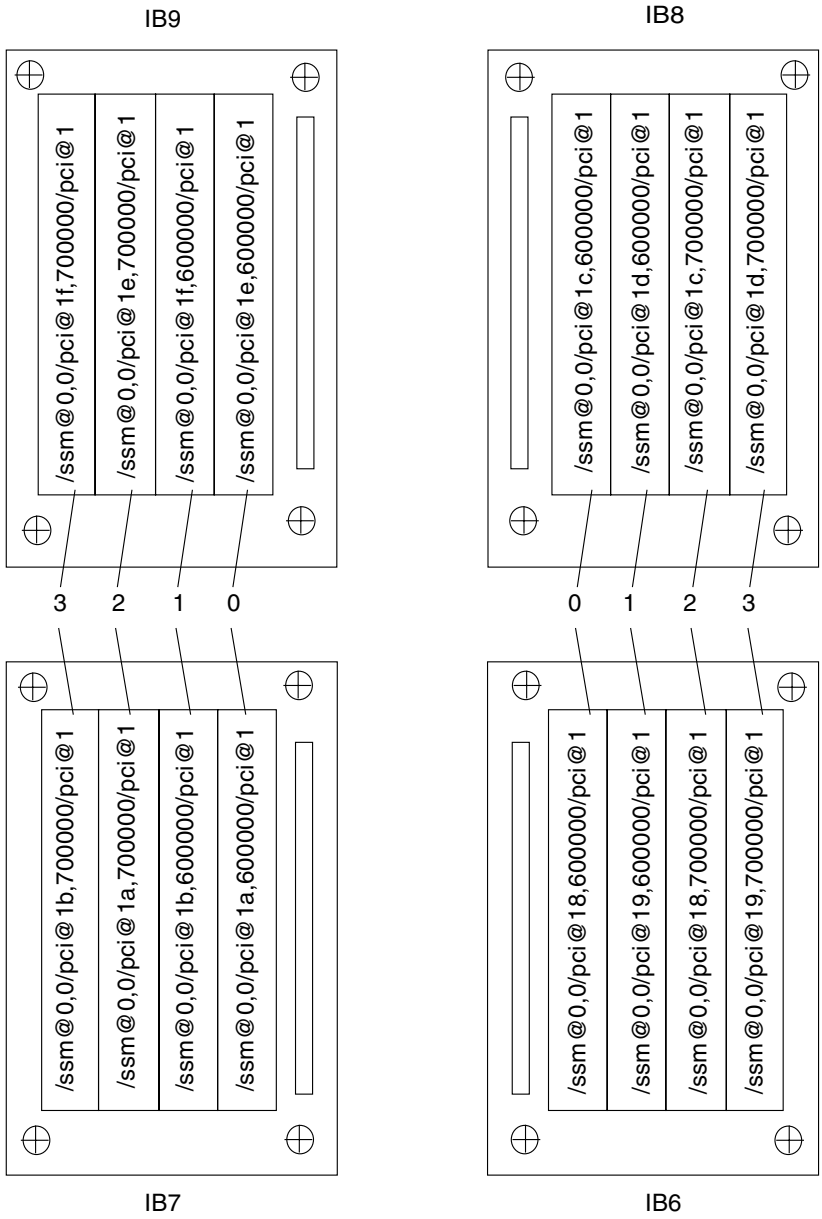

FIGURE A-5 Sun Fire E6900 and 6800 Systems 4-Slot CompactPCI Physical Slot Designations for IB6 through IB9

APPENDIX **B**

Setting Up an HTTP or FTP Server: Examples

This appendix provides sample procedures for setting up a firmware server, which is necessary to invoke the `flashupdate` command. A firmware server can be either an HTTP or an FTP server. To upgrade firmware, you can use either the FTP or HTTP protocol.

Note – These procedures assume that you *do not* have a web server currently running. If you already have a web server set up, you can use or modify your existing configuration. For more information, see `man httpd` and also the documentation included with your HTTP or FTP server.

Before you begin to set up the HTTP or FTP server, follow these guidelines:

- Having one firmware server is sufficient for several Sun Fire midrange systems.
- Connect the firmware server to the network that is accessible by the system controller.

Caution – The firmware server *must not* go down during the firmware upgrade. *Do not* power down or reset the system during the `flashupdate` procedure.

Setting Up the Firmware Server

This section provides the following sample procedures for setting up a firmware server:

- "To Set Up an HTTP Server" on page 188
- "To Set Up an FTP Server" on page 190

▼ To Set Up an HTTP Server

This sample procedure for setting up an Apache HTTP server with the Solaris 8 operating environment assumes that:

- An HTTP server *is not* already running.
- The Solaris 8 operating environment is installed for the HTTP server to be used.

1. **Log in as superuser and navigate to the** `/etc/apache` **directory.**

```
hostname % su
Password:
hostname # cd /etc/apache
```

2. **Copy the** `httpd.conf-example` **file to replace the current** `httpd.conf` **file.**

```
hostname # cp httpd.conf httpd.conf-backup
hostname # cp httpd.conf-example httpd.conf
```

3. **Edit the** `httpd.conf` **file and make changes to Port: 80, ServerAdmin, and ServerName.**

   a. **Search through the** `httpd.conf` **file to find the "**`# Port:`**" section to determine the correct location to add the Port 80 value as shown in** CODE EXAMPLE B-1**.**

CODE EXAMPLE B-1 Locating the `Port 80` Value in `httpd.conf`

```
# Port: The port to which the standalone server listens. For
# ports < 1023, you will need httpd to be run as root initially.
             #
Port 80

#
# If you wish httpd to run as a different user or group, you must
run
# httpd as root initially and it will switch.
```

b. **Search through the** `httpd.conf` **file to find the** `# ServerAdmin:` **section to determine the correct location to add the** `ServerAdmin` **value as shown in** CODE EXAMPLE B-2**.**

CODE EXAMPLE B-2 Locating the `ServerAdmin` Value in `httpd.conf`

```
# ServerAdmin: Your address, where problems with the server
# should be e-mailed. This address appears on some server-
# generated pages, such as error documents.

ServerAdmin root
#
# ServerName allows you to set a host name which is sent back to ...
```

c. **Search through the** `httpd.conf` **file and search for** `ServerName` **(**CODE EXAMPLE B-3**).**

CODE EXAMPLE B-3 Locating the `ServerName` Value in `httpd.conf`

```
#
# ServerName allows you to set a host name which is sent back to clients for
# your server if it's different than the one the program would get (i.e., use
# "www" instead of the host's real name).
#
# Note: You cannot just invent host names and hope they work. The name you
# define here must be a valid DNS name for your host. If you don't understand
# this, ask your network administrator.
# If your host doesn't have a registered DNS name, enter its IP address here.
# You will have to access it by its address (e.g., http://123.45.67.89/)
# anyway, and this will make redirections work in a sensible way.
#
ServerName oslab-mon
```

4. **Start Apache.**

CODE EXAMPLE B-4 Starting Apache

```
hostname # cd /etc/init.d
hostname # ./apache start
hostname # cd /cdrom/cdrom0/firmware/
hostname # mkdir /var/apache/htdocs/firmware_build_number
hostname # cp * /var/apache/htdocs/firmware_build_number
```

▼ To Set Up an FTP Server

This sample procedure for setting up an FTP server assumes that the Solaris 8 operating environment is installed for the FTP server to be used.

1. **Log in as superuser and check the** `ftpd` **man page.**

```
hostname % su
Password:
hostname # man ftpd
```

In the man pages you will find the script that will create the FTP server environment. Search through the man page to find the lines shown in the example below.

```
This script will setup your ftp server for you.
Install it in the /tmp directory on the server.
Copy this script and chmod 755 script_name.
#!/bin/sh
# script to setup anonymous ftp area
#
```

2. **Copy the entire script out of the man page (not just the portion shown in the sample above) into the** `/tmp` **directory and change the permission on the script to** `chmod 755`**.**

```
hostname # vi /tmp/script
hostname # chmod 755 /tmp/script
hostname # cd /tmp
hostname # ./script
```

3. **If you need to set up anonymous FTP, add the following entry to the** `/etc/passwd` **file. You must use the following:**
   - Group – `65534`
   - Shell – `/bin/false`

   `/export/ftp` was chosen to be the anonymous FTP area. This prevents users from logging in as the FTP user.

```
# ftp:x:500:65534:Anonymous FTP:/export/ftp:/bin/false
```

Note – When using anonymous FTP, you should be concerned about security.

---

4. **Add the following entry to the** `/etc/shadow` **file. Do not give a valid password. Instead, use NP.**

```
ftp:NP:6445::::::
```

5. **Configure the FTP server on the loghost server.**

```
hostname # cd /export/ftp/pub
hostname # mkdir firmware_build_number
hostname # cd /cdrom/cdrom0/firmware
hostname # cp * /export/ftp/pub/firmware_build_number
```

Glossary

ACL Access control list. In order to assign a board to a domain with the `addboard` command, the board name must be listed in the access control list (ACL). The ACL is checked when a domain makes an `addboard` or a `testboard` request on that board. On the Sun Fire 3800 system, all power supplies have switches on them to power them on. These power supplies must be listed in the ACL.

active board state When the board state is active, the slot has hardware installed in it. The hardware is being used by the domain to which it was assigned. Active boards cannot be reassigned.

assigned board state When a board state is assigned, the slot belongs to a domain but the hardware is not necessarily tested and configured for use. The slot can be given up by the domain administrator or reassigned by the platform administrator.

auto-diagnosis (AD) engine A firmware feature that detects and diagnoses hardware errors that affect the availability of a platform and its *domains*.

available board state When a board state is available, the slot is not assigned to any particular *domain*.

Capacity on Demand (COD) Capacity on Demand (COD) is an option that provides additional processing resources (CPUs) when you need them. These additional CPUs are provided on COD CPU/Memory boards that are installed in Sun Fire midrange systems systems. You can access the COD CPUs after you purchase the COD right-to-use (RTU) licenses for them.

CHS Component health status. The component maintains information regarding its health, including the diagnosis information generated by the *auto-diagnosis (AD) engine*.

domain A domain runs its own instance of the Solaris operating environment and is independent of other domains. Each domain has its own CPUs, memory, and I/O assemblies. *Fireplane switches* are shared between domains in the same *segment*.

domain administrator The domain administrator manages the *domain*.

DSA Digital Signature Algorithm standard, published by the National Institute of Standards and Technology. The digital authentication standard of the U.S. government.

failover The switchover of the main system controller to its spare or the system controller clock source to another system controller clock source when a failure occurs in the operation of the main system controller or the clock source.

Fireplane switch A crossbar switch, also referred to as a *Repeater board*, that connects multiple CPU/Memory boards and I/O assemblies. Having the required number of Fireplane switches is mandatory for operation. There are Fireplane switches in each midrange system except for the Sun Fire 3800. In the Sun Fire 3800 system, the equivalent of two Fireplane switches are integrated into the active centerplane.

headroom See *instant access CPUs*.

instant access CPUs Unlicensed COD CPUs on COD CPU/Memory boards installed in Sun Fire midrange systems. You can access up to a maximum of four COD CPUs for immediate use while you are purchasing the COD right-to-use (RTU) licenses for the COD CPUs. Also referred to as *headroom*.

partition See *segment*.

persistent logging The storage of certain SC-generated message logs and system errors in the NVRAM of SC V2s (enhanced-memory system controllers).

platform administrator The platform administrator manages hardware resources across *domains*.

port A board connector.

Repeater board See *Fireplane switch*.

RSA Created by Rivest, Shamir, and Adleman (RSA), it is the most popular form of public-key cryptography.

RTS Redundant transfer switch.

RTU Redundant transfer unit.

RTU license Right-to-use license.

segment A segment, also referred to as a *partition*, is a group of *Fireplane switches* that are used together to provide communication between CPU/Memory boards and I/O assemblies in the same domain. You can set up the system with one segment or two segments using the system controller `setupplatform` command. Segments do not share Fireplane switches.

SNMP agent Simple Network Management Protocol agent. Enables or disables the SNMP agent.

SSH Secure Shell. A client/server protocol that provides secure access to a shell.

Sun Management Center software A graphical user interface that monitors your system.

system controller firmware The application that performs all of the system controller configuration functions.

Index

A

ACL (access control list), 68
  boards listed, 70
  defining, 91
`addcodlicense` command, 128
auto-diagnosis (AD) engine, 25, 52, 99
auto-restoration, 25, 52, 101
availability, 23

B

boards
  adding to a domain, 69
  CPU/Memory, 15
    hot-swapping, 151
    mixing in domains, 55
    redundant, 14
    testing, 141
  deleting from a domain, 69, 72, 150
  I/O Assemblies
    hot-swapping, 152
  Repeater, 19, 154
  System Controller, 9, 156

C

Chassis HostID, 128
CHS (component health status), 25, 101
COD (Capacity on Demand), 28, 123
  instant access CPUs (headroom), 125
  prerequisites, 126
  resources
    configuring, 131
    CPU status, 136, 137
    monitoring, 126, 133, 135
  right-to-use (RTU) licenses, 124
    allocation, 125
    certificates, 124
    keys, 127, 129
    obtaining, 128
component location status, 23, 150
components
  failures, 169
configurations
  I/O assemblies, 16
console messages, 164
cooling, redundant, 14, 17
CPU/Memory boards, 15
  hot-swapping, 151
  number of processors, 15
  testing, 141
CPU/Memory mapping, 173
currents, monitoring, 13

D

date, setting, 48
`deleteboard` command, 69, 72
`deletecodlicense` command, 129
device name mapping, 173
device path names to physical system devices, 173
diagnostic information
  auto-diagnosis message, 100
  domain diagnosis message, 103
  Solaris operating environment, 167
domain, 1, 193

A, entering from the platform shell, 38
active, 2
adding boards to, 69
auto-restoration, 101
console, 13
creating, 2, 60, 61
default configuration, 2
deleting boards from, 69, 72
features, 2
hang recovery, 102, 168
hardening, 82
minimization, 98
navigation between domain and platform shells, 36
overview, 2
parameters, 102, 104
powering on, 54, 62, 67
restoration controls, 104
security guidelines, 93
separation, 81, 82
shell, 12
starting, 62
dual-partition mode, 4
dynamic reconfiguration (DR), 28
hot-swapping a CPU/Memory board, 151
hot-swapping an I/O assembly, 152

E

ECC (error checking and correction), 22
environmental monitoring, 13
Ethernet (network) port, 10
System Controller boards, 9

F

failover
clock, 22
system controller, 25
managing, 117
recovering, 121
fan trays
hot-swapping, 17
redundant, 14, 17
fault, system, 163
Fireplane switches
See Repeater boards
`flashupdate` command, 78
`format` command, 167
FrameManager, 29
FRUs (field-replaceable units)
hardware errors, 100
listing, 165

G

grids, power, 47

H

hardening
domains, 82
systems, 83
host keys, SSH, 89
HostID/MAC address swap, 3, 74, 171
hot-spares, 126
hot-swapping
CPU/Memory boards, 151
fan trays, 17
I/O assemblies, 152

I

I/O assemblies
hot-swapping, 152
mapping, 175
redundant, 16
supported configurations, 16
I/O, redundant, 16
IP multipathing software, 16

K

keyswitch
positions, 67
virtual, 13

L

log messages, 14
loghosts, 10, 95, 104, 164
platform, 89

M

maintenance, 63
mapping, 173
CPU/Memory, 173
I/O assembly, 175
node, 173
memory

redundant, 15
messages
event, 105
log, 14
minimization, domain, 98
modes, 4
monitoring
COD resources, 133
current, 13
environmental conditions, 13
hung domains, 102
sensors, 13
temperature, 13
voltage, 13
multipathing, 16

N

navigation, between domain and platform shells, 36
network connections
see remote (network) connections
node mapping, 173

P

partitions, 4
modes, 4
passwords
changing, 95
domain, 94
platform, 91
users and security, 82
persistent storage
message logs, 14
system errors, 14
platform, 1, 129
passwords, 91
security guidelines, 84
setting up, 47
platform shell
entering domain A, 38
navigation between domain and platform shells, 36
POST (power-on self-test), 21, 103
power, 18
redundant, 14, 18
power grids, 47
power supplies, 18
powering off
system, 58, 64
powering on
domain, 54, 62, 67
flowchart, 44
prerequisite steps, 46
system, 12
`prtconf` command, 167
`prtdiag` command, 167

R

RAS, 21
redundant, 18
cooling, 14, 17
CPU/Memory boards, 14
fan trays, 14
I/O, 16
I/O assemblies, 16
memory, 15
power, 14, 18
power supplies, 18
Repeater boards, 19
reliability, 21
remote (network) connections
OpenSSH, 11
SSH, 9, 10, 86
Telnet, 9, 10, 86
terminating, 40
Repeater boards, 3
description, 19
failure recovery, 3, 170
redundant, 19
removing and replacing, 154
`restartssh` command, 89
RTU (right-to-use) licenses, 124

S

Secure Shell (SSH) protocol, 10
host keys, 89
SSHv2 server, 86
security
additional considerations, 97
domain configuration guidelines, 93
platform configuration guidelines, 84
users and passwords, 82
segments, 3
sensors, monitoring, 13

separation, domain, 82
serial (direct) connections
  serial port, 9
  terminating, 39
serial (RS-232) port, 10
serviceability, 27
`setdate` command, 48
`setescape` command, 37
`setkeyswitch` command, 67
`setkeyswitch command`, 97
`setkeyswitch off` command, 59, 65
`setkeyswitch on` command, 54, 62, 67, 137
`setls` command, 24
setting up, 44
  date and time, 48
  domains, 60
  platform, 47
`setupplatform` command, 131
shells, domain, 12
`showboards` command, 166
`showcodlicense` command, 129
`showcodusage` command, 134
`showcomponent` command, 25, 109, 138
`showdomain` command, 139, 166
`showenvironment` command, 166
`showerrorbuffer` command, 165
`showfru` command, 165
`showlogs` command, 106, 139, 165, 166
`showplatform` command, 88, 139, 166
`showresetstate` command, 166
`showsc` command, 166
single-partition mode, 4
SNMP, 29, 90
snooping, 4
SNTP, 48, 90
`ssh-keygen` command, 89
starting a domain, 62
Sun Management Center software, 29
`sysdef` command, 167
syslog host, 14, 104
system
  administrator, tasks, 12
  faults, 163
  hardening, 83
  powering off, 58, 64
  powering on, 12
  setting up, 44, 47
system controller
  definition, 1, 8
  ehanced memory (SC V2s), 14
  enhanced memory (SC V2s), 9
  failover, 113
  functions, 8
  navigation, 36
  powering on, 12
System Controller boards
  enhanced memory, 9
  Ethernet (network) port, 9
  ports, 9, 10
  removing and replacing, 156
  serial (RS-232) port, 9

T

TELNET protocol, 9
temperature, monitoring, 13
`testboard` command, 141
time, setting, 48
`tip` command, 39
troubleshooting, 163

V

virtual keyswitch, 13, 67
voltage, monitoring, 13